METRO AIR PARK
Public Facilities Master Plan
Volume 2
Final Report
Revision 2 - Updated to 2006 Construction Costs

December 11, 2007

Originally Adopted by the County of Sacramento Board of Supervisors
September 26, 2000

Prepared for:

County of Sacramento

Prepared by:

Stantec Consulting Inc.
2590 Venture Oaks Way
Sacramento, CA 95833
(916) 569-2500

844 71010

TABLE OF CONTENTS

Volume No. 2

Section

D	Roadway Projects
E	Freeway Projects
F	On-Site Drainage Projects
G	Off- Site Drainage Projects
H	Sewer Projects
I	Water Projects
J	Transit Projects
K	Fire Service Projects
L	HCP Fee Payments

PROJECT NO. PHASE 1AA/1AB MP-1.1

METRO PARKWAY - I-5 to Elverta Road

Introduction

It is proposed to construct two lanes of Metro Parkway and a median with partial landscaping in order to provide a two lane arterial roadway from the north limits of the I-5 interchange to Elverta Road.

Background

This facility is the first project for the main north/south four and six-lane arterial roadway in Metro Air Park and is to be constructed as a major roadway component of the Metro Air Park Facilities Financing Plan.

Existing Facilities

No facilities exist at this project location.

Proposed Facilities

Right-of-Way:	96-feet with additional widening at bus turnouts and intersections
Landscape Easement:	18-feet on each side
Pavement:	Two 12-foot lanes and two six-foot outside shoulders from I-5 to Elverta Road, which include all the interior paving as well as exterior paving at 4 locations (as defined in volume 1). The excavation for the entire R/W width, as well as both P.U.E. and landscape easements, will be completed in this phase.
Median	12-foot wide, from 500 LF south of Road "I" to 1000 LF south of Elverta Road and a 34 foot strip from 1000 LF south of Elverta Road to Elverta Road, with Type 5 curb and widening for two-lane left turn lanes as required.
Median Landscaping	From 600 LF south of Elkhorn Boulevard to 600 LF north of Elkhorn Boulevard and from 1000 feet south of Elverta Road to Elverta Road.
Striping and Street Signs:	As required
Drainage Box Culverts	Drainage structures for overland release at Golf Course crossings.

Drainage System:	Construct drain pipes and drain manholes as shown on exhibit DRN-1 in volume 1, section F.
Sewer System:	Construct sewer pipe, sewer manholes, and sewer stubs as shown on exhibit S-1 in volume 1, section H.
Water System:	Construct domestic water mains, hydrants, valves, stubs and appurtenances identified as Initial Phase on exhibit W-1 in volume 1, section I. Construct irrigation water main and pump station from Natomas Central Mutual Water Company Main Canal to West Lake.
Joint Trench System:	Construct trench, conduit, and structures for electrical, gas, phone and cable TV facilities including sleeves for street lights, signals, signal interconnects and irrigation.
Monument Signs and Landscaping:	Two at Elverta Road Intersection
Snake Fence	Construct a snake fence along Lone Tree Road

Preliminary Estimate of Costs
For
Metro Air Park
Metro Parkway Surface Improvements
Phase 1AA / Phase 1AB
MP-1.1

May 2006

Item	Description	Quantity	Unit	Unit Price	Total
	2 Lanes, Width = 36' - I-5 to Elverta Road, L = 15,000 LF Median 14,000 LF 12' Wide, 1,000 LF 34' Wide				
1	Clearing & Grubbing	1	JOB	$22,500.00	$22,500.00
2	Excavation	225,000	CY	$4.95	$1,113,750.00
3	7"AC, 14" AB, & 12" Chemical Treated (I-5 Crossing to Elkhorn Blvd.)	118,000	SF	$5.38	$634,840.00
4	7.5"AC, 14" AB, & 12" Lime Treated (Elkhorn Blvd. to Road "A")	355,000	SF	$5.38	$1,909,900.00
5	7.5"AC, 14" AB, & 12" Chem & Lime Treated (Road "A" to Elverta Road)	130,000	SF	$5.57	$724,100.00
6	Striping (2-Lane)	30,000	LF	$1.90	$56,904.98
7	Street Sign	13	EA	$379.37	$4,931.76
8	Relocate Drainage Ditch	3,500	LF	$5.50	$19,250.00
9	Median Curb	28,400	LF	$18.70	$531,080.00
10	Median Landscaping	48,400	SF	$7.00	$338,800.00
11	Monument Signs and Landscaping	2	EA	$200,000.00	$400,000.00
12	Joint Trench Including Street Lighting	15,000	LF	$311.00	$4,665,000.00
13	Relocate Power Pole	8	EA	$11,500.00	$92,000.00
14	Ditch Abandonment	1	LS	$461,000.00	$461,000.00
	Subtotal MP-1.1				$10,974,056.74
	Engineering 13.5% (Private)				$1,477,000.00
	Contingencies 10% (Private)				$1,097,405.67
	Construction Management 2.6% (Private)				$283,600.00
	Total MP-1.1				$13,832,062.41
	Funded with Series 2004 A Bond Proceeds				$6,852,992.00
	Funded with Series 2006 B Bond Proceeds				$6,979,070.41

Preliminary Estimate of Costs
For
Metro Air Park
Metro Parkway Drainage Improvements
Phase 1AA / Phase 1AB
MP-1.1

October 2006

Item	Description	Quantity	Unit	Unit Price	Total
	(I-5 to Elverta Road, L=15,000 LF)				
1.	15" Storm Drain	400	LF	$61.80	$24,719.71
2.	18" Storm Drain	1,320	LF	$65.92	$87,013.36
3.	21" Storm Drain	1,000	LF	$68.67	$68,665.85
4.	24" Storm Drain	1,370	LF	$75.53	$103,479.43
5.	27" Storm Drain	1,020	LF	$82.40	$84,047.00
6.	30" Storm Drain	2,025	LF	$82.40	$166,858.01
7.	36" Storm Drain	2,535	LF	$96.13	$243,695.10
8.	42" Storm Drain	735	LF	$109.87	$80,751.04
9.	48" Storm Drain	600	LF	$123.60	$74,159.12
10.	54" Storm Drain	100	LF	$137.33	$13,733.17
11.	72" Storm Drain	200	LF	$192.26	$38,452.88
12.	Storm Drain Stub	58	EA	$6,179.93	$358,435.73
13.	48" Manhole	16	EA	$3,021.30	$48,340.76
14.	60" Manhole	12	EA	$4,943.94	$59,327.29
15.	60" Saddle Manhole	4	EA	$6,591.92	$26,367.69
16.	RC Junction Box	2	EA	$17,853.12	$35,706.24
17.	Culvert Erosion Control	3	EA	$6,866.58	$20,599.75
18.	DI Bases	75	EA	$1,716.65	$128,748.47
19.	Drainage Box Culvert North of Highline Ditch	1	EA	$305,182	$305,181.55
20.	Drainage Box Culvert South of Highline Ditch	1	EA	$305,182	$305,181.55
	Subtotal MAP-1.1				$2,273,463.69
	Engineering 15% (Private)				$341,019.55
	Contingency 10% (Private)				$227,346.37
	Construction Management 3% (Private)				$68,203.91
	SWPPP 3% (Private)				$68,203.91
	Total MP-1.1				$2,978,237.43
	Funded with Series 2004 A Bond Proceeds				$1,921,983.00
	Funded with Series 2006 B Bond Proceeds				$1,056,254.43

Preliminary Estimate of Costs
For
Metro Air Park
Metro Parkway Sewer improvements
Phase 1AA / Phase 1AB
MP-1.1

May 2006

Item	Description	Quantity	Unit	Unit Price	Total	CSD-1 Reimbursable Amount	Non-Reimbursable Amount
	(I-5 to Elverta Road, L = 15,000 LF)						
1	8" Sanitary Sewer 10'-14' Deep	2,363	LF	$90.64	$214,182.32	$0.00	$214,182.32
2	8" Sanitary Sewer 14'-18' Deep	2,361	LF	$103.58	$244,552.38	$0.00	$244,552.38
3	10" Sanitary Sewer 22'-26' Deep	2,061	LF	$128.26	$264,343.86	$0.00	$264,343.86
4	15" Sanitary Sewer 18'-22' Deep	2,215	LF	$152.44	$337,654.60	$0.00	$337,654.60
5	21" Sanitary Sewer 18'-22' Deep	1,381	LF	$292.66	$404,163.46	$404,163.46	$0.00
6	33" Sanitary Sewer 14'-18' Deep	199	LF	$338.73	$67,407.27	$67,407.27	$0.00
7	21" Sanitary Sewer 18'-22' Deep	3,844	LF	$363.18	$1,396,063.92	$1,396,063.92	$0.00
8	24" Sanitary Sewer 22'-26' Deep	2,486	LF	$414.59	$1,030,670.74	$1,030,670.74	$0.00
9	24" Sanitary Sewer 26'-30' Deep	2,486	LF	$442.24	$1,099,408.64	$1,099,408.64	$0.00
10	30" Sanitary Sewer 26'-30' Deep	525	LF	$469.43	$246,450.75	$246,450.75	$0.00
11	48" Manhole 10'-14' Deep	4	EA	$4,183.00	$16,732.00	$0.00	$16,732.00
12	60" Manhole 18'-22' Deep	10	EA	$11,767.00	$117,670.00	$0.00	$117,670.00
13	60" Manhole 22'-26' Deep	12	EA	$15,304.00	$183,648.00	$0.00	$183,648.00
14	60" Manhole 22'-26' Deep	20	EA	$17,668.00	$353,360.00	$353,360.00	$0.00
15	72" Manhole 18'-22' Deep	9	EA	$17,405.00	$156,645.00	$156,645.00	$0.00
16	Service Stubs	59	EA	$7,920.00	$467,280.00	$0.00	$467,280.00
	Subtotal MAP-1.1				$6,600,232.94	$4,754,169.78	$1,846,063.16
	Engineering 15% (Private)				$990,034.94	$990,034.94	$0.00
	Contingencies 10% (Private)				$660,023.29	$475,416.98	$184,606.32
	Construction Management 3% (Private)				$198,006.99	$0.00	$198,006.99
	TOTAL MP-1.1				$8,448,298.16	$6,219,621.70	$2,228,676.46

Volume 1, Table 2, Phase 1AA - CSD-1	$4,830,754.00
Volume 2, Table 2, Phase 1ABA - CSD-1	$1,388,867.70
Funded with Series 2004 A Bond Proceeds - Non CSD-1	$1,906,862.00
Funded with Series 2006 B Bond Proceeds - Non CSD-1	$321,814.46

Preliminary Estimate of Costs
For
Metro Air Park
Metro Parkway Water Improvements
Phase 1AA / Phase 1AB
MP-1.1

May 2006

Item	Description	Quantity	Unit	Unit Price	Total
	(I-5 to Elverta Road, L = 15,000 LF)				
1.	12" Water Main Including Fire Hydrants	19,875	LF	$86.01	$1,709,536.60
2.	30" Water Main	10,180	LF	$195.92	$1,994,483.25
4.	Service Stubs/Crossings	25	EA	$7,884.66	$197,116.38
	Subtotal MP-1.1				$3,901,136.23
	Engineering 15% (Private)				$585,170.43
	Contingencies 10% (Private)				$390,113.62
	Construction Management 3% (Private)				$117,034.09
	Total MP-1.1				$4,993,454.37
	Funded with Series 2004 A Bond Proceeds				$3,035,648.00
	Funded with Series 2006 B Bond Proceeds				$1,957,806.37

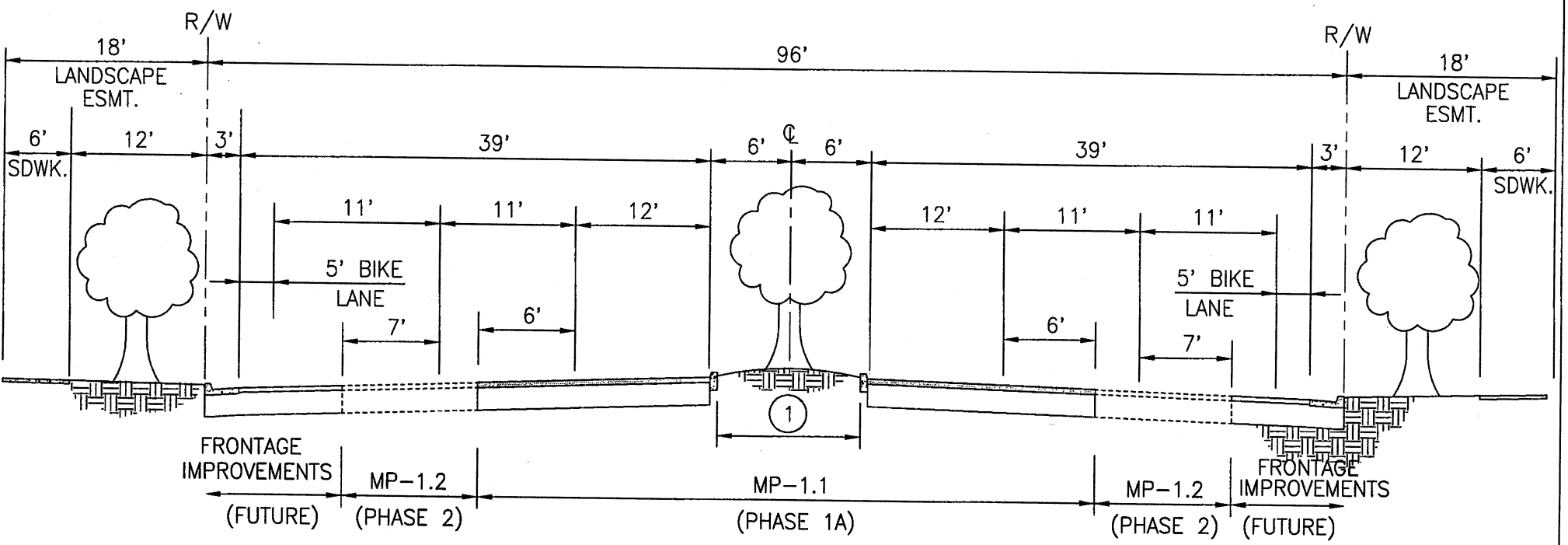

(1) MEDIAN LANDSCAPING FROM 600 LF SOUTH OF ELKHORN BLVD TO 600 LF NORTH OF ELKHORN BLVD.

PERSONNEL	
Drafted by:	V. FALLIS
Designed by:	D. JABBOUR
Checked by:	D. JOHNSON
Scale:	N.T.S.

METRO PARKWAY

(I-5 TO 1000' SOUTH OF ELVERTA ROAD)

Stantec

Stantec Consulting Inc.
2590 Venture Oaks Way
Sacramento, CA 95833-3288
Tel. 916.569-2500
Fax. 916.921.9274
www.stantec.com

PROJECT No.
M P
1.1

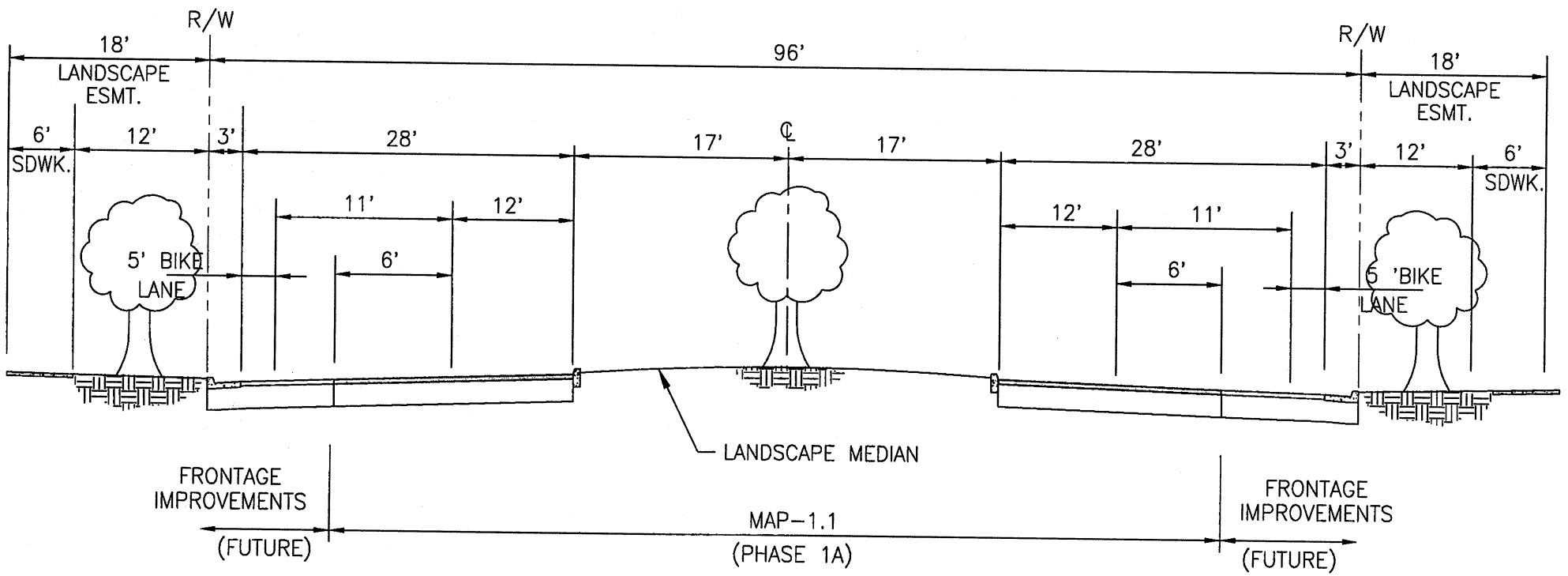

PERSONNEL	
Drafted by:	V. FALLIS
Designed by:	D. JABBOUR
Checked by:	D. JOHNSON
Scale:	N.T.S.

METRO PARKWAY

(1000' SOUTH OF ELVERTA ROAD TO ELVERTA ROAD)

Stantec

Stantec Consulting Inc.
2590 Venture Oaks Way
Sacramento, CA 95833-3288
Tel. 916.569-2500
Fax. 916.921.9274
www.stantec.com

PROJECT No.
M P
1.1

PROJECT NO. PHASE 2 MP-1.2
METRO PARKWAY - I-5 to 600' north of Elkhorn Boulevard

Introduction

It is proposed to construct two additional lanes on Metro Parkway from the north limits of the I-5 interchange to 600-feet north of Elkhorn Boulevard.

Background

This facility is the second project for the main north/south four and six-lane arterial roadway in Metro Air Park and is to be constructed as a major roadway component of the Metro Air Park Facilities Financing Plan.

Existing Facilities	Currently, no facilities exist at this location. Project No MP-1.1 will exist at the time of construction.
Proposed Facilities	
Right Turn Median:	Concrete cap at Elkhorn Boulevard free right.
Pavement:	One 12-foot lane in each direction from I-5 to 600-feet north of Elkhorn Boulevard. Intersection widening, to full width, will be required for signalization at Elkhorn Boulevard.
Curb, Gutter and Sidewalk:	At signalized intersections
Striping, Slurry Seal, and Street Signs:	As required
Monument Signs and Landscaping:	Two at I-5, four at Elkhorn Boulevard
Signalization:	Elkhorn Boulevard at ultimate configuration
Drainage:	Roadside ditch

Preliminary Estimate of Costs
For
Metro Air Park
Metro Parkway Surface Improvements
Phase 2
MP-1.2

May 2006

Item	Description	Quantity	Unit	Unit Price	Total
	(2 Lanes, Width = 24' - I-5 to 600' north of Elkhorn Blvd., L = 3,100 LF)				
1.	Clearing & Grubbing	94,400	SF	$0.13	$12,272.00
2.	Excavation	6,200	CY	$16.50	$102,300.00
3.	7"AC, 14" AB, & 12" Chemical Treated	61,400	SF	$6.16	$378,224.00
4.	7.5"AC, 14" AB, & 12" Lime Treated	13,000	SF	$6.20	$80,600.00
5.	7.5"AC, 14" AB, & 12" Chem & Lime Treated (Exterior Paving at Elkhorn Boulevard)	20,000	SF	$6.38	$127,600.00
6.	Sidewalk at Signalized Intersection	1,920	SF	$5.50	$10,560.00
7.	Concrete Caps on Right Turn Medians (Free right turn median at EB)	140	SF	$2.75	$385.00
8.	Monument Signs and Landscaping	6	EA	$220,000.00	$1,320,000.00
9.	Roadside Ditch	6,200	LF	$2.20	$13,640.00
10.	Striping (4-Lane)	6,200	LF	$7.15	$44,330.00
11.	Signalization @ Elkhorn Blvd	1	LS	$181,500.00	$181,500.00
	Subtotal MP-1.2				$2,271,411.00
	Engineering 25% (Private)				$567,852.75
	Contingencies 15% (Private)				$340,711.65
	Total MP-1.2				$3,179,975.40

*Costs include Slurry Seal

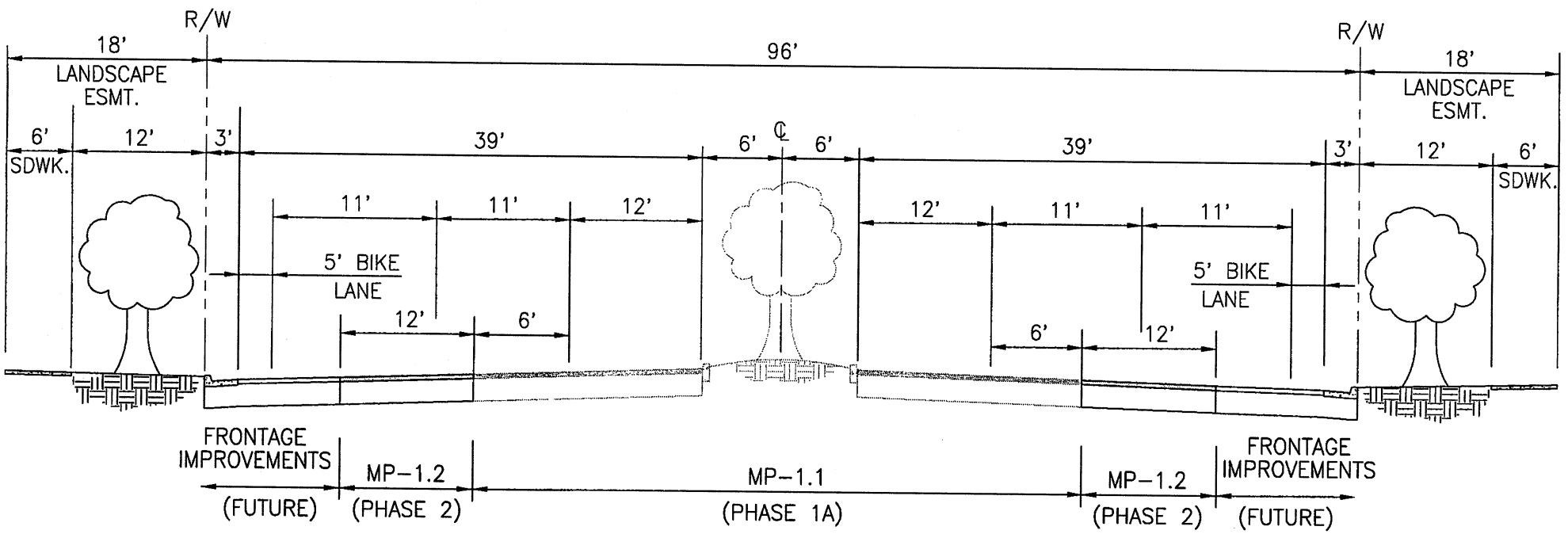

PERSONNEL	
Drafted by:	V. FALLIS
Designed by:	D. JABBOUR
Checked by:	D. JOHNSON
Scale:	N.T.S.

METRO PARKWAY

(I–5 INTERCHANGE TO 600' NORTH OF ELKHORNE BOULEVARD)

Stantec

Stantec Consulting Inc.
2590 Venture Oaks Way
Sacramento, CA 95833–3288
Tel. 916.569–2500
Fax. 916.921.9274
www.stantec.com

PROJECT No.
M P
1.2

PROJECT NO. PHASE 3 MP-2
METRO PARKWAY – 600' North of Elkhorn Boulevard to Road "A"

Introduction

It is proposed to construct one additional lane each direction on Metro Parkway from 600 feet north of Elkhorn Boulevard to Road "A", median and median landscaping on Metro Parkway from I-5 to 600 LF south of Elkhorn Boulevard and from 600 LF north of Elkhorn Boulevard to Road "A".

Background

This facility is the third project for the main north/south four and six-lane arterial roadway in Metro Air Park and is to be constructed as a major roadway component of the Metro Air Park Facilities Financing Plan.

Existing Facilities	Currently, no facilities exist at this location. Project No. MP 1.1 & 1.2 will exist at the time of construction.
Proposed Facilities	
Median Landscaping:	From 600 LF north of Elkhorn Boulevard to Road "A" and from I-5 to 600 LF south of Elkhorn Blvd.
Pavement:	Construct one 12-foot lane, in each direction from 600 LF north of Elkhorn Boulevard to Road "A"
Pavement Sawcut:	As required
Striping and Street Signs:	As required
Drainage:	Roadside ditch

Preliminary Estimate of Costs
For
Metro Air Park
Metro Parkway Surface Improvements
Phase 3
MP-2

May 2006

Item	Description	Quantity	Unit	Unit Price	Total
	(2 Lanes, Width = 24' - 600 LF North of Elkhorn Boulevard to Road "A", L = 8,100 LF) (Median Landscaping, 600 LF North of Elkhorn Boulevard to Road "A" and I-5 to 600 LF South of Elkhorn Boulevard, Width = 12', L = 10,000 LF)				
1	Clearing & Grubbing	217,600	SF	$0.13	$28,288.00
2	Excavation	14,500	CY	$16.50	$239,250.00
3	7.5"AC, 14" AB, & 12" Chem & Lime Treated	194,400	SF	$6.38	$1,240,272.00
4	7.5"AC, 14" AB, & 12" Chem & Lime Treated (Transition Pavement)	23,200	SF	$6.38	$148,016.00
5	Pavement Sawcut	1,700	LF	$2.20	$3,740.00
6	Pavement Removal	14,400	SF	$0.55	$7,920.00
7	Roadside Ditch	17,400	LF	$2.20	$38,280.00
8	Median Landscaping	69,000	SF	$7.70	$531,300.00
9	Striping	11,100	LF	$7.15	$79,365.00
	Subtotal MP-2				$2,316,431.00
	Engineering 25% (Private)				$579,107.75
	Contingencies 15% (Private)				$347,464.65
	Total MP-2				$3,243,003.40

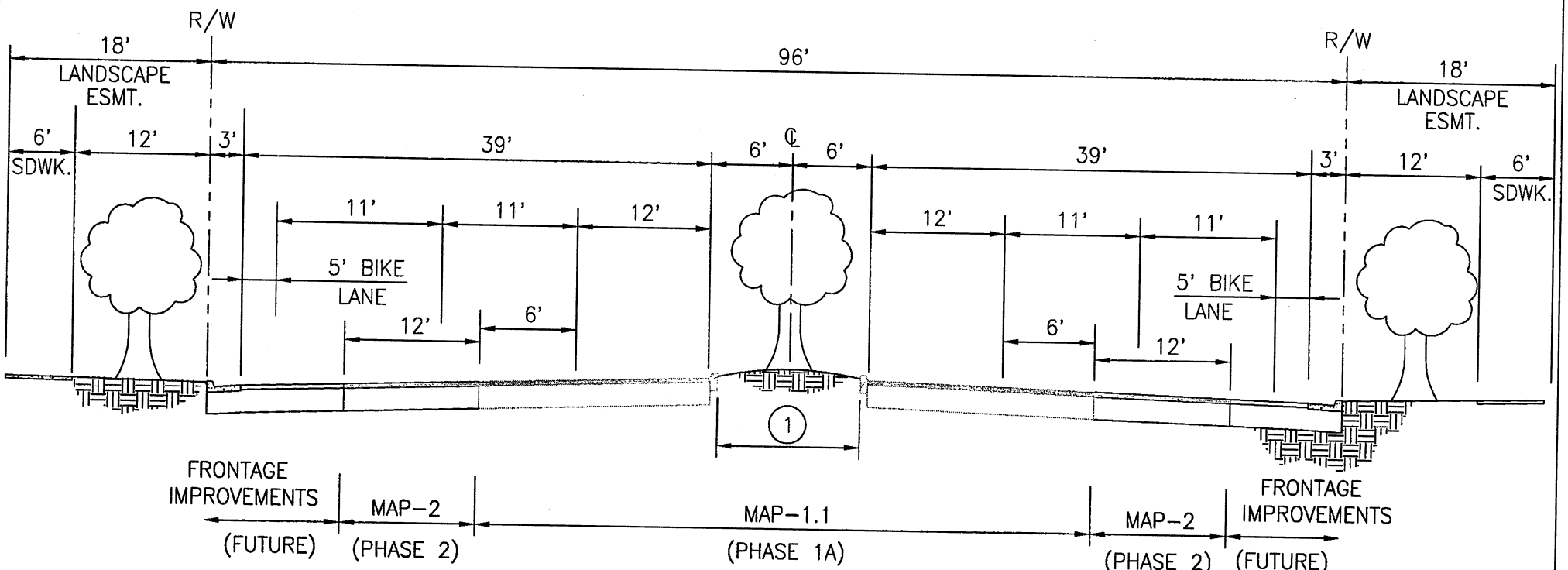

(1) MEDIAN LANDSCAPING FROM 600 LF NORTH OF ELKHORN BLVD. TO ROAD "A" AND FROM I–5 TO 600 LF SOUTH OF ELKHORN BLVD.

PERSONNEL	
Drafted by:	V. FALLIS
Designed by:	D. JABBOUR
Checked by:	D. JOHNSON
Scale:	N.T.S.

METRO PARKWAY

(600' NORTH OF ELKHORN BOULEVARD TO ROAD 'A')

Stantec

Stantec Consulting Inc.
2590 Venture Oaks Way
Sacramento, CA 95833–3288
Tel. 916.569–2500
Fax. 916.921.9274
www.stantec.com

PROJECT No.
M P
2

V:\52844\Active\84471010\Exhibits\Volume 2 Exhibits\sect-40.dwg 5/20/03 11:39am btaylor

PROJECT NO. PHASE 5 MP-3
METRO PARKWAY - I-5 to Elverta Road, Road "A", Road "D", Road "F", Road "G", Elverta Road

Introduction

It is proposed to construct the intersection widening at Road "D", Road "G", and Meister Way and signalization at Meister Way, Road "A", Road "D", Road "F", Road "G" and Elverta Road at ultimate configuration.

Background

This facility is the fourth project for the main north/south four and six-lane arterial roadway in Metro Air Park and is to be constructed as a major roadway component of the Metro Air Park Facilities Financing Plan.

Existing Facilities

Currently, no facilities exist at this project. Project No. MP-1.1, MP-1.2, and MP-2 will exist at the time of construction.

Proposed Facilities

Pavement:	Construct intersection widening required for signalization at Road "D", Road "G", and Meister Way.
Curb and Gutter:	Type 2 at signalized intersections
Sidewalk:	At signalized intersections
Right Turn Median:	Concrete cap at Elverta Road free right
Signalization:	Meister Way, Road "A", Road "D", Road "F", Road "G" and Elverta Road at ultimate configuration
Signalization Interconnect:	I-5 to Elkhorn Boulevard
Striping, Slurry Seal, and Street Signs:	As required

Preliminary Estimate of Costs
For
Metro Air Park
Metro Parkway Surface Improvements
Phase 5
MP-3

May 2006

Item	Description	Quantity	Unit	Unit Price	Total
1.	Clearing & Grubbing	56,900	SF	$0.13	$7,397.00
2.	Excavation	3,200	CY	$16.50	$52,800.00
3.	7.5" AC & 28" AB (Exterior Paving at Road "A")	5,100	SF	$7.27	$37,077.00
4.	7.5"AC, 9" AB, & 18" Lime Treated (Transitional Paving at Elverta Road)	51,800	SF	$5.72	$296,296.00
5.	Curb and Gutter at Signalized Intersection	790	LF	$24.20	$19,118.00
6.	Concrete Caps on Right Turn Medians at Elverta Road	68	SF	$2.75	$187.00
7.	Sidewalk at Signalized Intersection	5,760	SF	$5.50	$31,680.00
8.	Signalization Interconnect	3,000	LF	$11.00	$33,000.00
9.	Signalization @ Road "A"	1	LS	$181,500.00	$181,500.00
10.	Signalization @ Road "D"	1	LS	$143,000.00	$143,000.00
11.	Signalization @ Road "F"	1	LS	$181,500.00	$181,500.00
12.	Signalization @ Road "G"	1	LS	$181,500.00	$181,500.00
13.	Signalization @ Elverta Road	1	LS	$143,000.00	$143,000.00
14.	Signalization @ Meister Way	1	LS	$181,500.00	$181,500.00
	Subtotal MP-3				$1,489,555.00
	Engineering 25% (Private)				$372,388.75
	Contingencies 15% (Private)				$223,433.25
	Total MP-3				$2,085,377.00

*Costs include Slurry Seal and Restriping

PROJECT NO. PHASE 6 MP-4
METRO PARKWAY - South Bayou Rd, Road "A" to Elverta Road

Introduction

It is proposed to construct signalization at South Bayou Road and median landscaping from Road "A" to 1000 LF south of Elverta Road.

Background

This facility is the final project for the main north/south four and six-lane arterial roadway in metro Air Park and is to be constructed as a major roadway component of the Metro Air Park Facilities Financing Plan.

Existing Facilities

Currently, no facilities exist at this project. Project No. MP-1.1, MP-1.2, MP-2 and MP-3 will exist at the time of construction.

Proposed Facilities

Signalization:	South Bayou Road
Median Landscaping:	35-foot strip from Road "A" to 1000 LF south of Elverta Road.
Signalization Interconnect	Elkhorn Blvd. to Elverta Road
Striping, Slurry Seal, and Street Signs:	As required

Preliminary Estimate of Costs
For
Metro Air Park
Metro Parkway Surface Improvements
Phase 6
MP-4

May 2006

Item	Description	Quantity	Unit	Unit Price	Total
	(Median Landscaping, Width = 34', L = 2,135 LF)				
1.	Median Landscaping	72,590	SF	$7.70	$558,943.00
2.	Signalization Interconnect	12,000	LF	$11.00	$132,000.00
3.	Signalization @ S. Bayou Road	1	LS	$143,000.00	$143,000.00
	Subtotal MP-4				$833,943.00
	Engineering 25% (Private)				$208,485.75
	Contingencies 15% (Private)				$125,091.45
	Total MP-4				$1,167,520.20

*Costs include Slurry Seal and Restriping

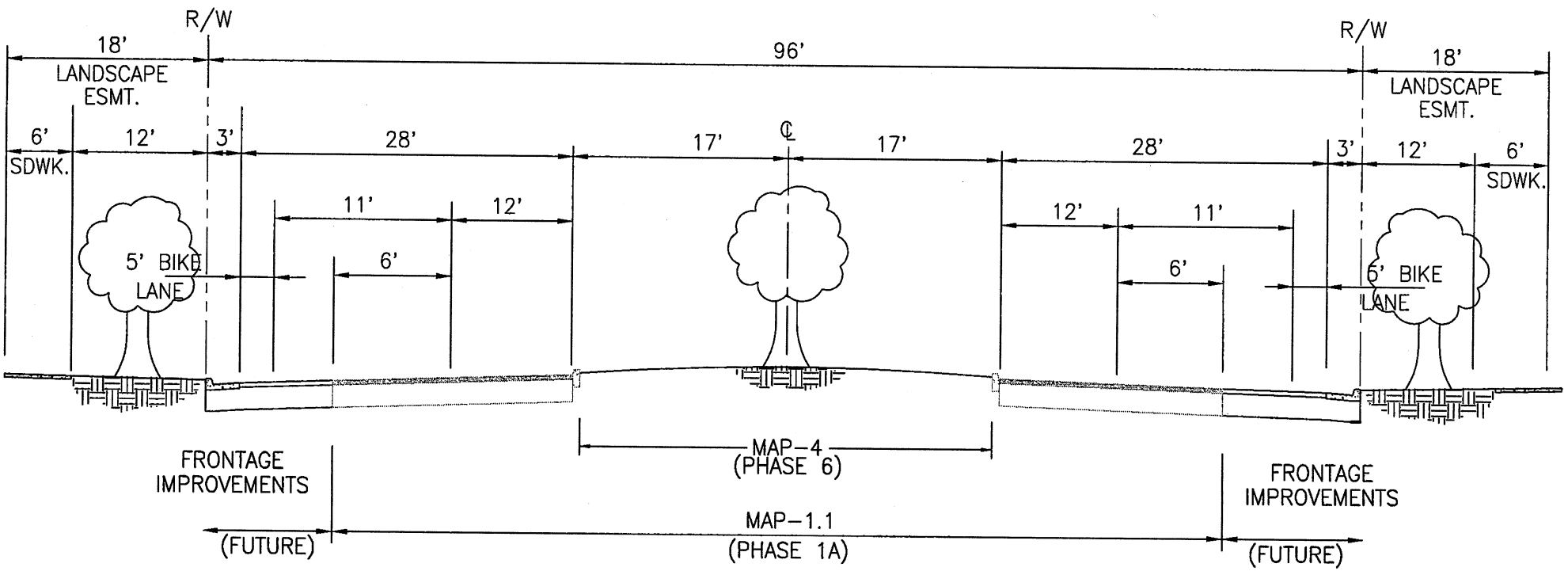

PERSONNEL	
Drafted by:	V. FALLIS
Designed by:	D. JABBOUR
Checked by:	D. JOHNSON
Scale:	N.T.S.

METRO PARKWAY

(ROAD 'A' TO 1000' SOUTH OF ELVERTA ROAD)

Stantec

Stantec Consulting Inc.
2590 Venture Oaks Way
Sacramento, CA 95833-3288
Tel. 916.569-2500
Fax. 916.921.9274
www.stantec.com

PROJECT No.
M P
4

V:\52844\Active\84471010\Exhibits\Volume 2 Exhibits\sect-01a.dwg 5/20/03 12:36pm btaylor

PROJECT NO. PHASE 1AA/1AB EB-1.1
ELKHORN BOULEVARD - Power Line Road to Lone Tree Road

Introduction

It is proposed to construct a two-lane roadway from Power Line Road to Lone Tree Road and median with landscaping from 600 LF west of Metro Parkway to Lone Tree Road.

Background

This facility is the first project for the main east/west two, four or six-lane arterial roadway in Metro Air Park and is to be constructed as a major roadway component of the Metro Air Park Facilities Financing Plan.

Existing Facilities

Currently, Elkhorn Boulevard is constructed between Power Line Road and Lone Tree Road to two-lane arterial standards. Proposed Elkhorn Boulevard will utilize a portion of this alignment from Lone Tree Road then west approximately 600 LF. At this point, proposed Elkhorn Boulevard will turn southwesterly from existing Elkhorn Boulevard. The existing portion of Elkhorn Boulevard between this point and Metro Parkway will be abandoned. The existing section between Metro Parkway and Power Line Road will remain as Road "J".

Proposed Facilities

Right-of-Way:	74-feet from Power Line Road to Metro Parkway (two and four-lane arterial); and 96-feet from Metro Parkway to Lone Tree Road (six-lane arterial) with additional widening at bus turnouts and intersections.
Landscape Easement:	18-feet on each side
Overlay:	20-feet (600 feet west of Lone Tree Road to Lone Tree Road)
Pavement:	One 13-foot lane and five-foot shoulder in each direction from Power Line Road to Road "B", one 13-foot lane and seven-foot shoulder in each direction from Road "B" to 600-feet west of Lone Tree Road. Quantities shown on the estimates include exterior and interior paving. The excavation for the entire R/W width, as well as both P.U.E. and landscape easements, will be completed in this phase.
Curb and Gutter:	Type 2 curb and gutter from Power Line Road to Road "B"
Striping and Street Signs:	As required

Drainage Channel Crossing:	Drainage structures at proposed open channel crossings for ultimate roadway width
Exist Canal Crossing:	Drainage structures as required
Drainage System:	Construct drain pipe and drain manholes as shown on exhibit D-1 in volume 1 section F.
Sewer System:	Construct sewer pipe, sewer manholes, and sewer stubs as shown on exhibit S-1 in volume 1 section H.
Water System:	Construct water mains, valves, hydrants, stubs and appurtenances as shown on exhibit W-1 in volume 1 section I.
Median with Landscaping	12' strip from 600 LF west of Metro Parkway to Lone Tree Road with Type 5 curb and widening for two-lane left turn lanes as required.
Joint Trench System	Construct trench, conduit, and structures for electrical, gas, phone and cable TV facilities including sleeves for street lights, signals, signal interconnect and irrigation.
Monument signs and Landscaping:	One at Lone Tree Road
Abandon Right-of-Way	Abandon R/W from 5600 feet west of Lone Tree Road to Lone Tree Road.

Preliminary Estimate of Costs
For
Metro Air Park
Elkhorn Boulevard Surface Improvements
Phase 1AA / Phase 1AB
EB-1.1

May 2006

Item	Description	Quantity	Unit	Unit Price	Total
	(2 Lanes, Width = 38' - Power Line Road to Road "B", L = 2,100 LF) (2 Lanes, Width = 40' - Road "B" to Metro Parkway, L = 1,000 LF) (2 Lanes, Width = 40' - Metro Parkway to 600' West of Lone Tree Road, L = 2,900 LF) (2 Lanes, Overlay Width = 20' - 600' West of Lone Tree Road to Lone Tree Road, L = 600 LF) Full Pavement 20'-600' 600' West of Lone Tree Road to Lone Tree Road, L = 600				
1.	Clearing & Grubbing	1	JOB	$19,500.00	$19,500.00
2.	Excavation	65,000	CY	$4.95	$321,750.00
3.	6.5"AC, 11" AB, & 12" Lime Treated	175,000	SF	$4.72	$826,000.00
4.	7"AC, 14" AB, & 12" Lime Treated	162,000	SF	$5.20	$842,400.00
5.	AC Overlay	12,000	SF	$2.10	$25,200.00
6.	Striping	13,200	LF	$1.65	$21,780.00
7.	Street Sign	9	EA	$330.00	$2,970.00
8.	Monument Signs and Landscaping	1	EA	$200,000.00	$200,000.00
9.	Median Curb	11,800	LF	$21.00	$247,800.00
10.	Type 2 Curb & Gutter	2,000	LF	$24.20	$48,400.00
11.	Median Landscaping	46,600	SF	$7.00	$326,200.00
12.	Joint Trench Including Street Lighting	6,600	LF	$275.00	$1,815,000.00
13	Power Pole Relocation	10	EA	$10,000.00	$100,000.00
	Subtotal EB-1.1				$4,797,000.00
	Engineering 13.2% (Private)				$633,500.00
	Contingencies 10% (Private)				$479,700.00
	Construction Management 2.4% (Private)				$116,700.00
12.	Abandon R/W (Fee to Natomas Mutal Water Company)	0.9	AC	$5,000.00	$4,500.00
	Total EB-1.1				$6,031,400.00
	Funded with Series 2004 A Bond Proceeds				$3,486,804.00
	Funded with Series 2006 B Bond Proceeds				$2,544,596.00*

*A cost savings from EB-1.1 SWR will be applied to this project. The total amount for the EB-1.1 Surface Improvements project shown in Table 2 will show a reduced amount based on the following:

Proposed for Series 2006 B Bonds (above)	$ 2,544,596.00
Saving from the EB-1.1 SWR Project	$ (240,668.00)
Revised total shown in Table 2	$ 2,303,928.00

Preliminary Estimate of Costs
For
Metro Air Park
Elkhorn Boulevard Drainage Improvements
Phase 1AA / Phase 1AB
EB-1.1

October 2006

Item	Description	Quantity	Unit	Unit Price	Total
	(Power Line Road to Lone Tree Road, L = 6,600 LF)				
1.	36" Storm Drain	1,500	LF	$88.48	$132,716.41
2.	42" Storm Drain	1,900	LF	$101.12	$192,122.81
3.	48" Storm Drain	300	LF	$113.76	$34,127.08
4.	54" Storm Drain	300	LF	$126.40	$37,918.98
5.	60" Storm Drain	500	LF	$139.04	$69,518.12
6.	66" Storm Drain	1,180	LF	$158.00	$186,434.96
7.	Storm Drain Stub	17	EA	$5,687.85	$96,693.39
8.	DI Bases	33	EA	$1,579.96	$52,138.59
9.	60" Manhole	9	EA	$4,550.28	$40,952.49
10.	60" Type A Saddle Manhole	3	EA	$6,067.04	$18,201.11
11.	RC Junction Box	1	EA	$16,431.56	$16,431.56
12.	Channel Box Culvert at Powerline Rd	1	EA	$95,754.99	$95,754.99
13.	Drainage Structure at Detention Basin #2.	1	EA	$127,673.32	$127,673.32
	Subtotal EB-1.1				$1,100,683.80
	Engineering 15% (Private)				$165,102.57
	Contingency 10% (Private)				$110,068.38
	Construction Management 3% (Private)				$33,020.51
	SWPPP 3% (Private)				$33,020.51
	Total EB-1.1				$1,441,895.77
	Funded with Series 2004 A Bond Proceeds				$1,031,542.00
	Funded with Series 2006 B Bond Proceeds				$410,353.77

Preliminary Estimate of Costs
For
Metro Air Park
Elkhorn Boulevard Sewer Improvements
Phase 1AA / Phase 1AB
EB-1.1

May 2006

Item	Description	Quantity	Unit	Unit Price	Total	CSD-1 Reimbursable Amount	Non-Reimbursable Amount
	(Power Line Road to Lone Tree Road, L = 6,600 LF)						
1	8" Sanitary Sewer 10'-14' Deep	1,101	LF	$76.23	$83,929.23	$0.00	$83,929.23
2	10" Sanitary Sewer 10'-14' Deep	1,202	LF	$99.00	$118,998.00	$0.00	$118,998.00
3	18" Sanitary Sewer 14'-18' Deep	3,409	LF	$231.82	$790,274.38	$790,274.38	$0.00
4	30" Sanitary Sewer 26'-30' Deep	2,214	LF	$469.69	$1,039,893.66	$1,039,893.66	$0.00
5	33" Sanitary Sewer 30'-34' Deep	43	LF	$484.84	$20,848.27	$20,848.27	$0.00
6	48" Manhole 10'-14' Deep	1	EA	$3,524.40	$3,524.40	$0.00	$3,524.40
7	60" Manhole 14'-18' Deep	6	EA	$6,930.00	$41,580.00	$0.00	$41,580.00
8	60" Manhole 26'-30' Deep	18	EA	$20,454.33	$368,178.00	$368,178.00	$0.00
10	72" Manhole 18'-22' Deep	1	EA	$17,424.06	$17,424.06	$17,424.06	$0.00
11	Service Stubs	23	EA	$7,920.00	$182,160.00	$0.00	$182,160.00
	Subtotal EB-1.1				$2,666,810.00	$2,236,618.37	$430,191.63
	Engineering 15% (Private)				$400,021.50	$400,021.50	$0.00
	Contingencies 10% (Private)				$266,681.00	$223,661.84	$43,019.16
	Construction Management 3% (Private)				$80,004.30	$0.00	$80,004.30
	TOTAL EB-1.1				$3,413,516.79	$2,860,301.70	$553,215.09

Volume 1, Table 2, Phase 1AA - CSD-1	$705,641.00
Volume 2, Table 2, Phase 1ABA - CSD-1	$2,154,660.70
led with Series 2004 A Bond Proceeds - Non CSD-1	$793,889.00

Preliminary Estimate of Costs
For
Metro Air Park
Elkhorn Boulevard Water Improvements
Phase 1AA / Phase 1AB
EB-1.1

May 2006

Item	Description	Quantity	Unit	Unit Price	Total
	(Power Line Road to Lone Tree Road, L = 6,600 LF)				
1.	12" Water Main Including Fire Hydrants (Power Line to Metro Parkway)	3,000	LF	$81.08	$243,237.53
2	2 - 12" Water Main Including Fire Hydrants (Metro Parkway to Lone Tree)	3,400	LF	$162.16	$551,338.41
3	Service Stubs/Crossings	13	EA	$7,432.26	$96,619.35
	Subtotal EB-1.1				$891,195.30
	Engineering 15% (Private)				$133,679.30
	Contingencies 10% (Private)				$89,119.53
	Construction Management 3% (Private)				$26,735.86
	Total EB-1.1				$1,140,729.98
	Funded with Series 2004 A Bond Proceeds				$836,352.00
	Funded with Series 2006 B Bond Proceeds				$304,377.98

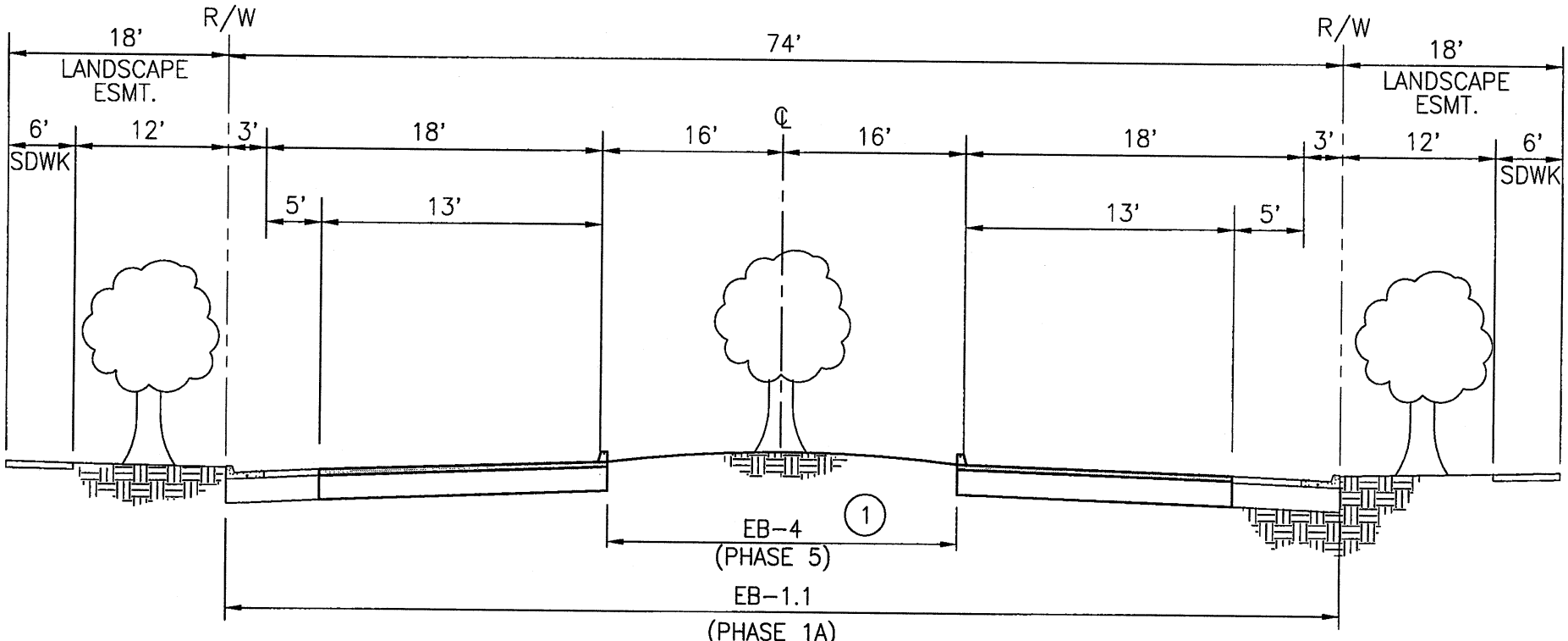

(1) MEDIAN LANDSCAPES FROM POWER LIVE ROAD TO 600' WEST OF METRO PARKWAY.

PERSONNEL	
Drafted by:	V. FALLIS
Designed by:	D. JABBOUR
Checked by:	D. JOHNSON
Scale:	N.T.S.

ELKHORN BOULEVARD
(POWER LINE ROAD TO ROAD 'B')

Stantec Consulting Inc.
2590 Venture Oaks Way
Sacramento, CA 95833-3288
Tel. 916.569-2500
Fax. 916.921.9274
www.stantec.com

PROJECT No.
E B
1.1,4

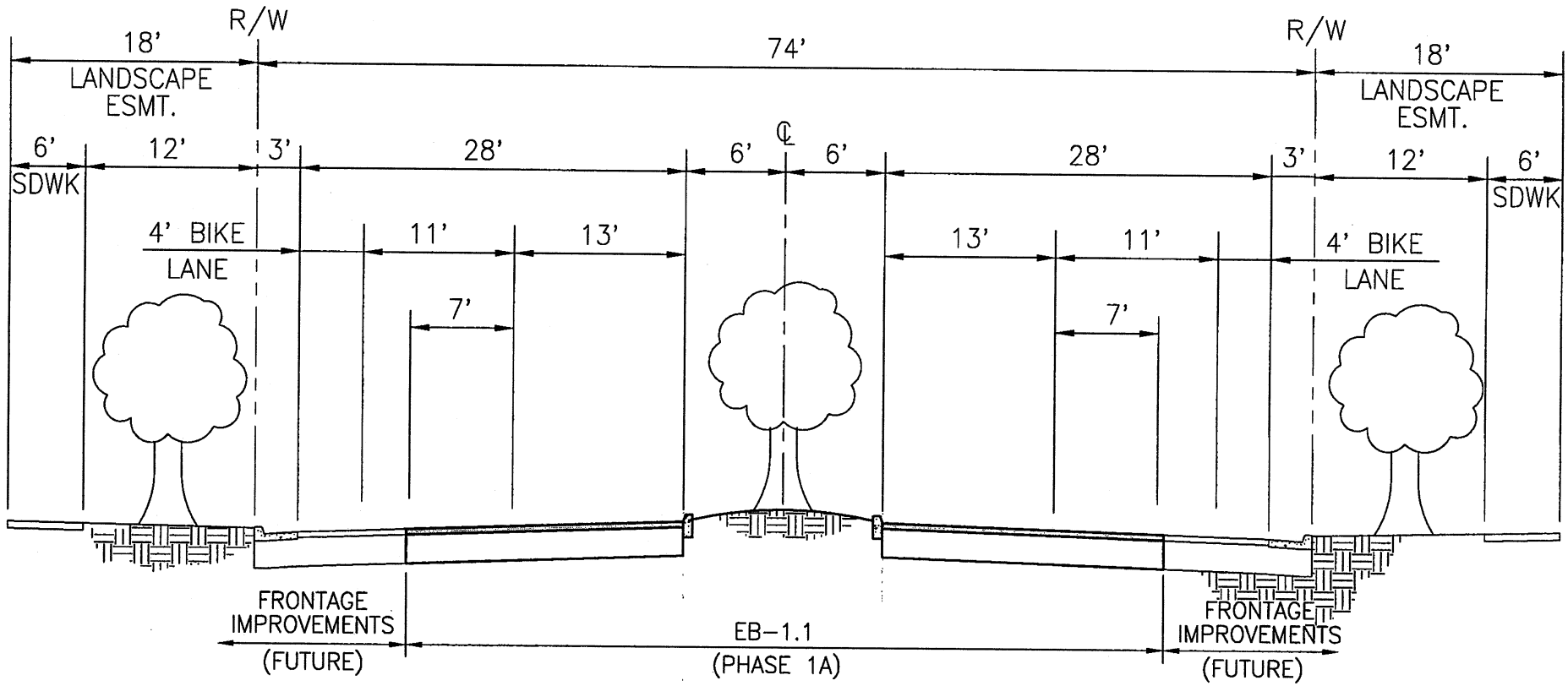

PERSONNEL	
Drafted by:	V. FALLIS
Designed by:	D. JABBOUR
Checked by:	D. JOHNSON
Scale:	N.T.S.

ELKHORN BOULEVARD

(ROAD 'B' TO 600' WEST OF LONE TREE ROAD)

Stantec

Stantec Consulting Inc.
2590 Venture Oaks Way
Sacramento, CA 95833–3288
Tel. 916.569–2500
Fax. 916.921.9274
www.stantec.com

PROJECT No.
E B
1.1

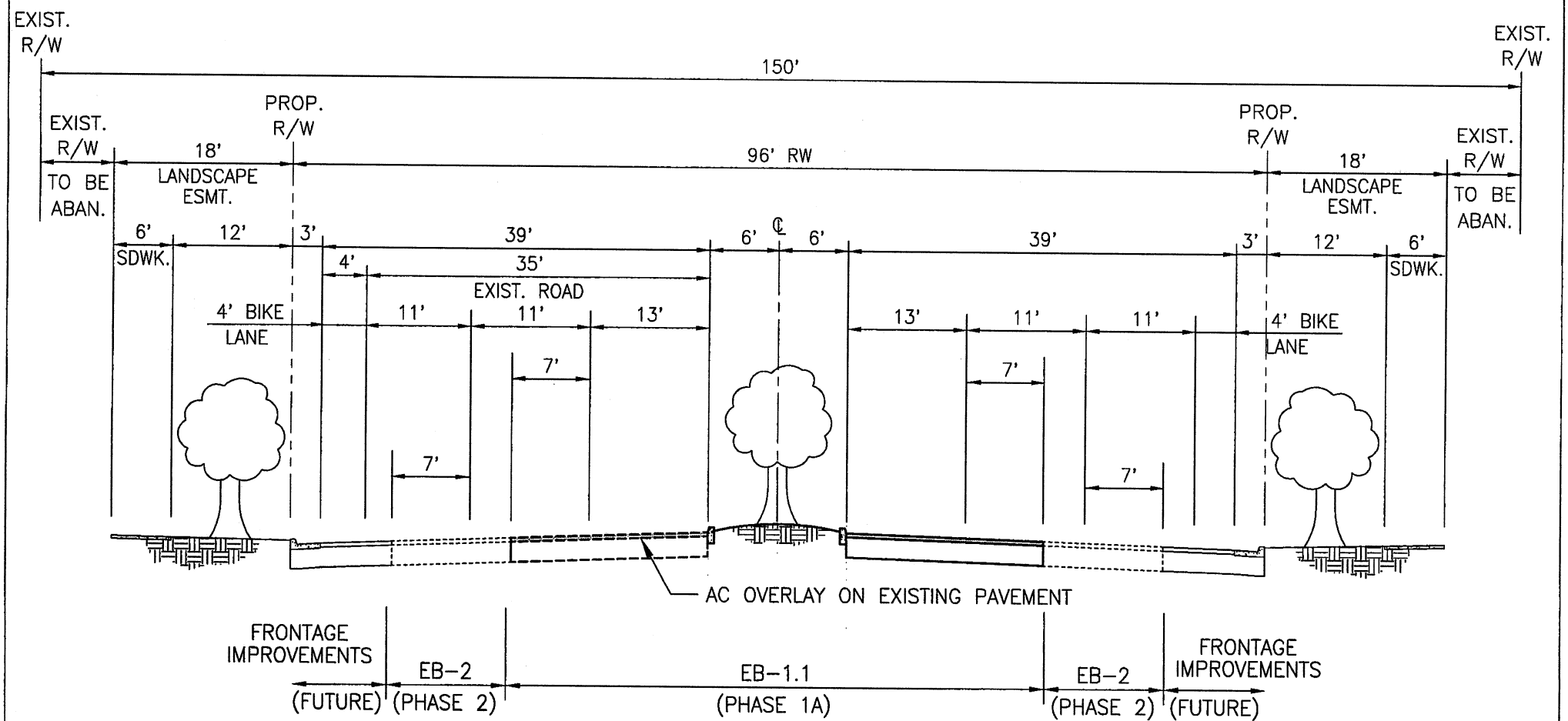

PERSONNEL	
Drafted by:	V. FALLIS
Designed by:	D. JABBOUR
Checked by:	D. JOHNSON
Scale:	N.T.S.

ELKHORN BOULEVARD

(600' WEST OF LONE TREE ROAD TO LONE TREE ROAD)

Stantec

Stantec Consulting Inc.
2590 Venture Oaks Way
Sacramento, CA 95833-3288
Tel. 916.569-2500
Fax. 916.921.9274
www.stantec.com

PROJECT No.
E B
1.1

V:\52844\Active\84471010\Exhibits\Volume 2 Exhibits\sect-05.dwg 5/30/03 12:20pm cskinner

PROJECT NO. PHASE 2 EB-1.2
ELKHORN BOULEVARD – Metro Parkway Intersection

Introduction

It is proposed to construct the intersection widening for Elkhorn Boulevard at Metro Parkway.

Background

This facility is the second project for the main east/west two, four or six-lane arterial roadway in Metro Air Park and is to be constructed as a major roadway component of the Metro Air Park Facilities Financing Plan.

Existing Facilities

Currently, Elkhorn Boulevard is constructed between Power Line Road and Lone Tree Road to two-lane arterial standards. Proposed Elkhorn Boulevard will utilize a portion of this alignment from Lone Tree Road then west approximately 600 LF. At this point, proposed Elkhorn Boulevard will turn southwesterly from existing Elkhorn Boulevard. The existing portion of Elkhorn Boulevard between this point and Metro Parkway will be abandoned. The existing section between Metro Parkway and Power Line Road will remain as Road "J". Project No. EB-1.1 and MP-1.1 will exist at the time of construction.

Proposed Facilities

Pavement:	Construct intersection widening required for signalization and a transition at each end.
Striping and Street Signs:	As required
Monument signs and Landscaping:	One at Power Line Road

Preliminary Estimate of Costs
For
Metro Air Park
Elkhorn Boulevard Surface Improvements
Phase 2
EB-1.2

May 2006

Item	Description	Quantity	Unit	Unit Price	Total
	(Metro Parkway Intersection)				
1.	Clearing & Grubbing	20,000	SF	$0.13	$2,600.00
2.	Excavation	2,500	CY	$16.50	$41,250.00
3.	6.5" AC & 24" AB	20,000	SF	$6.27	$125,400.00
	(Exterior paving at Metro Air Parkway)				
4.	Monument Signs and Landscaping	1	EA	$220,000.00	$220,000.00
	Subtotal EB-1.2				$389,250.00
	Engineering 25% (Private)				$97,312.50
	Contingencies 15% (Private)				$58,387.50
	Total EB-1.2				$544,950.00

PROJECT NO. PHASE 3 EB-2
ELKHORN BOULEVARD – Metro Parkway to Lone Tree Road

Introduction

It is proposed to construct one additional lane, in each direction, on Elkhorn Boulevard from Metro Parkway to Lone Tree Road.

Background

This facility is the third project for the main east/west two, four or six-lane arterial roadway in Metro Air Park and is constructed as a major roadway component of the Metro Air Park Facilities Financing Plan.

Existing Facilities

Currently, no facilities exist at this project location. Project No. EB-1.1 and EB-1.2 will exist at time of construction.

Proposed Facilities

Pavement:	Construct 11-feet additional feet, in each direction, from Metro Parkway to Lone Tree Road.
Striping, Slurry Seal, and Street Signs:	As required
Drainage	Roadside ditch
Signalization:	Road "F" at ultimate configuration
Signalization Interconnect:	Road "F" at Metro Parkway
Monument:	One at Lone Tree Road

Preliminary Estimate of Costs
For
Metro Air Park
Elkhorn Boulevard Surface Improvements
Phase 3
EB-2

May 2006

Item	Description	Quantity	Unit	Unit Price	Total
	(2 Lanes, Width = 22' - Metro Parkway to Lone Tree Road, L = 3,400 LF 1 Lane (AC Overlay), Width = 11' - 600' West of Lone Tree Road to Lone Tree Road)				
1.	Clearing & Grubbing	106,100	SF	$0.13	$13,793.00
2.	Excavation	5,300	CY	$16.50	$87,450.00
3.	7"AC, 9" AB, & 18" Lime Treated	74,800	SF	$5.51	$412,148.00
4.	7"AC, 9" AB, & 18" Lime Treated (Transitional Paving)	26,000	SF	$5.51	$143,260.00
5.	7"AC, 9" AB, & 18" Lime Treated (Exterior Paving at Lone Tree Road)	5,300	SF	$5.51	$29,203.00
6.	AC Overlay	6,600	SF	$2.30	$15,180.00
7.	Roadside Ditch	6,800	LF	$2.20	$14,960.00
8.	Striping	4,600	LF	$7.15	$32,890.00
9.	Pavement Sawcut	1,200	LF	$2.20	$2,640.00
10.	Signalization @ Road "F"	1	LS	$181,500.00	$181,500.00
11.	Signalization Interconnect	1,500	LF	$11.00	$16,500.00
12.	Monument @ Lone Tree Road	1	EA	$220,000.00	$220,000.00
	Subtotal EB-2				$1,169,524.00
	Engineering 25% (Private)				$292,381.00
	Contingencies 15% (Private)				$175,428.60
	Total EB-2				$1,637,333.60

*Costs include Slurry Seal

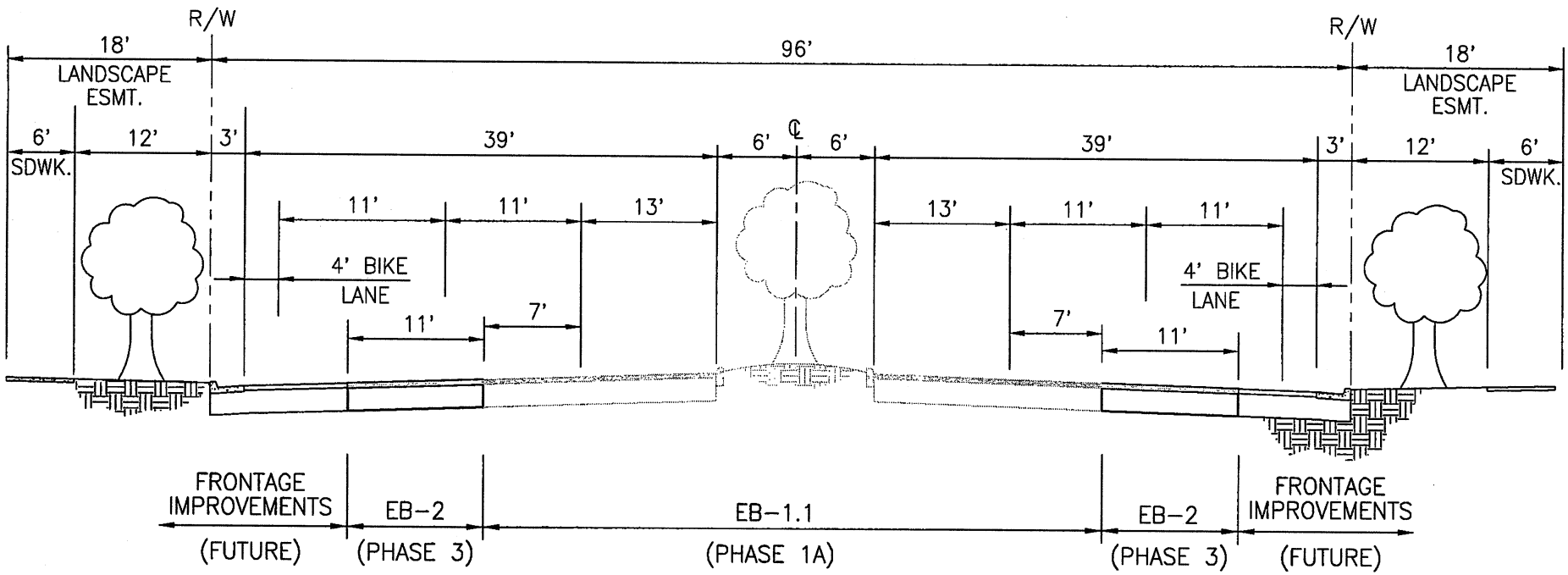

PERSONNEL	
Drafted by:	V. FALLIS
Designed by:	D. JABBOUR
Checked by:	D. JOHNSON
Scale:	N.T.S.

ELKHORN BOULEVARD

(METRO PARKWAY TO LONE TREE ROAD)

Stantec

Stantec Consulting Inc.
2590 Venture Oaks Way
Sacramento, CA 95833–3288
Tel. 916.569–2500
Fax. 916.921.9274
www.stantec.com

PROJECT No.
E B
2

PROJECT NO. PHASE 4 EB-3
ELKHORN BOULEVARD - Lone Tree Road to SR-99

Introduction

It is proposed to construct two eastbound lanes and overlay the existing pavement for two westbound lanes from Lone Tree Road to the westerly limits of the SR-99 interchange.

Background

This facility is the fourth project for the main east/west two, four or six-lane arterial roadway in Metro Air Park and is to be constructed as a major roadway component of the Metro Air Park Facilities Financing Plan.

Existing Facilities

Currently, Elkhorn Boulevard is constructed between Lone Tree Road and SR-99 to two-lane arterial standards with roadside ditches on each side. Project No. EB-1.1, EB-1.2, EB-2 will exist at time of construction.

Proposed Facilities

Right-of-Way:	Existing 150-foot County right-of-way (110' Grant Deed to the County of Sacramento per document 670301 O.R. 105 & 108 and a 70' Private Road and Canal Easement per Book 15 PG 42, 30' of which overlap the 110' grant deed).
Median:	10-foot graded median without curb capable of being widened to 14-feet in the future when median curb is added
Overlay:	34-foot wide overlay to provide a 2-foot median shoulder, one 12-foot lane, one 11-foot lane and a 9-foot shoulder
Pavement:	Two-foot median shoulder, one 12-foot lane, one 11-foot lane and a five-foot shoulder.
Striping and Street Signs:	As required
Drainage:	Roadside ditch on south side and cross culverts for ultimate width as required

Preliminary Estimate of Costs
For
Metro Air Park
Elkhorn Boulevard Surface Improvements
Phase 4
EB-3

May 2006

Item	Description	Quantity	Unit	Unit Price	Total
	(4 Lanes, AC;AB Width = 30', Overlay Width = 34')				
1.	Clearing & Grubbing	120,000	SF	$0.13	$15,600.00
2.	Excavation	6,200	CY	$42.00	$260,400.00
3.	7.5"AC, 9" AB, & 18" Lime Treated	120,000	SF	$5.72	$686,400.00
4.	Pavement Removal (for median construction)	3,200	SF	$0.55	$1,760.00
5.	AC Overlay	136,000	SF	$2.30	$312,800.00
6.	Roadside Ditch	8,000	LF	$2.20	$17,600.00
7.	Striping	4,000	LF	$7.15	$28,600.00
8.	Street Sign	2	EA	$380.00	$760.00
9.	Cross Culverts	5	EA	$2,750.00	$13,750.00
	Subtotal EB-3				$1,337,670.00
	Engineering 25% (Public)				$334,417.50
	Contingencies 33% (Public)				$441,431.10
	Total EB-3				$2,113,518.60

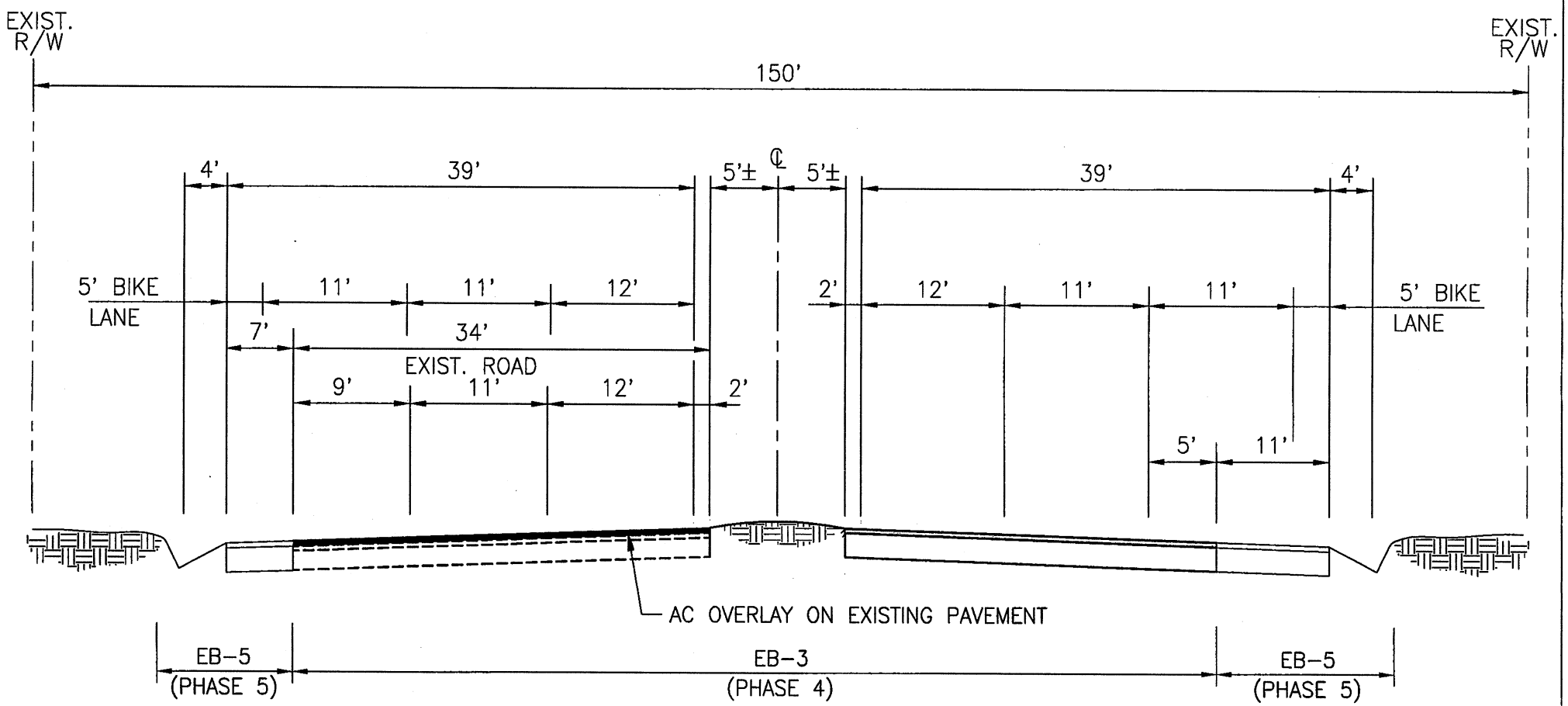

PERSONNEL	
Drafted by:	V. FALLIS
Designed by:	D. JABBOUR
Checked by:	D. JOHNSON
Scale:	N.T.S.

ELKHORN BOULEVARD
(LONE TREE ROAD TO SR 99)

Stantec Consulting Inc.
2590 Venture Oaks Way
Sacramento, CA 95833-3288
Tel. 916.569-2500
Fax. 916.921.9274
www.stantec.com

PROJECT No.
E B
3 & 5

V:\52844\Active\84471010\Exhibits\Volume 2 Exhibits\sect-70.dwg 5/20/03 2:52pm btaylor

PROJECT NO. PHASE 5 EB-4
ELKHORN BOULEVARD - Power Line Road to Lone Tree Road

Introduction

It is proposed to construct intersection signalization at Power Line Road and Lone Tree Road and median and median landscape from Power Line Road to 600 feet west of Metro Parkway.

Background

This facility is the final project for the main east/west two, four or six-lane arterial roadway in Metro Air Park and is to be constructed as a major roadway component of the Metro Air Park Facilities Financing Plan.

Existing Facilities

Currently, no facilities exist at this project location. Project No. EB-1.1, EB-1.2, EB-2 and EB-3 will exist at the time of construction.

Proposed Facilities

Sidewalk:	At signalized intersections
Landscaping:	850± LF of full landscaping east of Power Line Road between the southerly R/W of Elkhorn Boulevard and the northerly light rail R/W
Signalization Interconnect:	Power Line Road to Lone Tree Road
Signalization:	Power Line Road, Lone Tree Road at ultimate configuration
Striping, Slurry Seal, and Street Signs:	As required
Median with landscaping:	12-foot strip from Road "B" to 600 feet west of Metro Parkway. 32-foor strip from Power Line Road to Road "B", widening for two-lane left turn lanes as required.
Curb & Gutter:	Type 2 at signalized intersections
Monument:	One at Power Line Road

Preliminary Estimate of Costs
For
Metro Air Park
Elkhorn Boulevard Surface Improvements
Phase 5
EB-4

May 2006

Item	Description	Quantity	Unit	Unit Price	Total
	(Median Lanscaping, Width = 32', L = 1,475 LF; Width = 12', L = 320 LF)				
1.	Clearing & Grubbing	21,000	SF	$0.13	$2,730.00
2.	Sidewalk at Signalized Intersection	3,800	SF	$5.50	$20,900.00
3.	Landscaping	25,000	SF	$7.70	$192,500.00
4.	Median Landscaping	51,040	SF	$7.70	$393,008.00
5.	Curb and Gutter at Signalized Intersectio	810	LF	$24.20	$19,602.00
6.	Signalization Interconnect	6,600	LF	$11.00	$72,600.00
7.	Signalization @ Power Line Road	1	LS	$148,500.00	$148,500.00
8.	Signalization @ Lone Tree Road	1	LS	$154,000.00	$154,000.00
9.	Monument @ Power Line Road	1	EA	$220,000.00	$220,000.00
	Subtotal EB-4				$1,223,840.00
	Engineering 25% (Private)				$305,960.00
	Contingencies 15% (Private)				$183,576.00
	Total EB-4				$1,713,376.00

*Costs include Slurry Seal and Restriping

PROJECT NO. PHASE 5 EB-5
ELKHORN BOULEVARD - Lone Tree Road to SR-99

Introduction

It is proposed to construct the exterior lanes from Lone Tree Road to the westerly limits of the SR-99 interchange.

Background

This facility is the final project for this six-lane arterial section of Elkhorn Boulevard to be constructed as a major roadway component of the Metro Air Park Facilities Financing Plan.

Existing Facility

Currently, Elkhorn Boulevard is constructed between Lone Tree Road and SR-99 to two-lane arterial standards. Project EB-3 will exist at the time of construction.

Proposed Facilities

Pavement:	Add seven-feet to the westbound lanes to provide a two-foot median shoulder, one 12-foot lane, two 11-foot lanes and a five-foot bike lane. Add 11-feet to the eastbound lane to provide a two-foot median shoulder, a 12-foot lane, two 11-foot lanes and a five-foot bike lane
Pavement Sawcut:	Lone Tree Road to SR-99
Striping and Street Signs:	As required
Drainage:	Roadside ditch each side and cross culverts as required

Preliminary Estimate of Costs
For
Metro Air Park
Elkhorn Boulevard Surface Improvements
Phase 5
EB-5

May 2006

Item	Description	Quantity	Unit	Unit Price	Total
	(Lone Tree Road to SR99, L = 4,000 LF) (2 Lanes, Width = 18')				
1.	Clearing & Grubbing	72,000	SF	$0.13	$9,360.00
2.	Excavation	3,700	CY	$42.00	$155,400.00
3.	7.5"AC, 9" AB, & 18" Lime Treated	72,000	SF	$5.72	$411,840.00
4.	Roadside Ditch	8,000	LF	$2.20	$17,600.00
5.	Striping	8,000	LF	$7.15	$57,200.00
6.	Pavement Sawcut	8,000	LF	$2.20	$17,600.00
	Subtotal EB-5				$669,000.00
	Engineering 25% (Public)				$167,250.00
	Contingencies 33% (Public)				$220,770.00
	Total EB-5				$1,057,020.00

PROJECT NO. PHASE 5 EB-6
ELKHORN BOULEVARD - Airport Boulevard/Crossfield Drive to Power Line Road

Introduction

It is proposed to construct one lane each way in Elkhorn Boulevard from the proposed location at Airport Boulevard/Crossfield Drive Urban Interchange to Power Line Road.

Background

This facility is the only project for this two-lane arterial section of Elkhorn Boulevard and provides a direct connection to the Sacramento Metropolitan Airport and is to be constructed as a major roadway component of the Metro Air Park Facilities Financing Plan.

Proposed Facilities

Right-of-Way Acquisition:	122-feet Airport Boulevard/Crossfield Drive to Power Line Road with additional widening at bus turnouts and intersections. Includes 25-feet of landscaping each side.
Median:	12-foot strip with Type 5 Curb and widening at intersections for two-lane left turn lanes as required.
Right Turn Median:	Concrete Cap at SW Right Turn Lane.
Median Landscaping:	Provide full landscaping for 12-foot median in accordance with SIA requirements.
Frontage Landscaping:	Provide full landscaping for the 25-foot landscape corridor on each side in accordance with SIA requirements.
Pavement:	One 13-foot lane and a seven-foot bike lane each direction
Striping, Slurry Seal, and Street Signs:	As required in accordance with SIA requirements.
SIA Informational Signs:	As required in accordance with SIA requirements.
Drainage:	Roadside ditch with cross.
Street Lighting:	As required in accordance with SIA requirements.
Signalization Interconnect:	From Crossfield Drive to Power Line Road

Signalization:	Airport Boulevard/Crossfield Drive at two locations and modify Power Line Road to ultimate configuration.
SIA Boundary Fence:	6-foot high chain link fence with three-strand barbed wire in accordance with SIA requirements.

Preliminary Estimate of Costs
For
Metro Air Park
Elkhorn Boulevard Surface Improvements
Phase 5
EB-6

May 2006

Item	Description	Quantity	Unit	Unit Price	Total
	(Airport Boulevard to Power Line Road, L = 5,900 LF) (2 Lanes, Width = 40') (Median Landscaping, Width = 11)				
1.	Clearing & Grubbing	247,200	SF	$0.13	$32,136.00
2.	Excavation	19,300	CY	$25.00	$482,500.00
3.	6.5"AC, 12" AB, & 12" Lime Treated	236,000	SF	$5.30	$1,250,800.00
4.	6.5"AC, 12" AB, & 12" Lime Treated (Exterior Paving at Power Line Road)	11,200	SF	$5.30	$59,360.00
5.	Median Curb	11,800	LF	$21.00	$247,800.00
6.	Concrete Cap at PLR Right Turn Lane	2,200	SF	$2.75	$6,050.00
7.	18" Cross Culverts	330	LF	$52.80	$17,424.00
8.	30" Irrigation Ditch Crossing	110	LF	$71.50	$7,865.00
9.	Roadside Ditch	11,800	LF	$2.20	$25,960.00
10.	Power Pole Relocation	2	EA	$11,500.00	$23,000.00
11.	Median Landscaping	64,900	SF	$7.70	$499,730.00
12.	Landscaping	295,000	SF	$7.70	$2,271,500.00
13.	Street Lighting	54	EA	$3,300.00	$178,200.00
14.	Signalization Interconnect	5,900	LF	$11.00	$64,900.00
15.	Striping	11,800	LF	$7.15	$84,370.00
16.	Street Sign	2	EA	$380.00	$760.00
17.	Airport Informational Signs	5	EA	$550.00	$2,750.00
18.	SIA Boundary Fence	5,900	LF	$13.20	$77,880.00
19.	Signalization @ Airport Boulevard/Crossfield I	2	EA	$148,500.00	$297,000.00
20.	Modify signalization at Power Line Road	1	EA	$148,500.00	$148,500.00
	Subtotal EB-6				$5,778,485.00
	Engineering 25% (Public)				$1,444,621.25
	Contingencies 33% (Public)				$1,906,900.05
21.	ROW Acquisition	17	AC	$50,000.00	$850,000.00
	Total EB-6				$9,980,006.30

*Costs include Slurry Seal

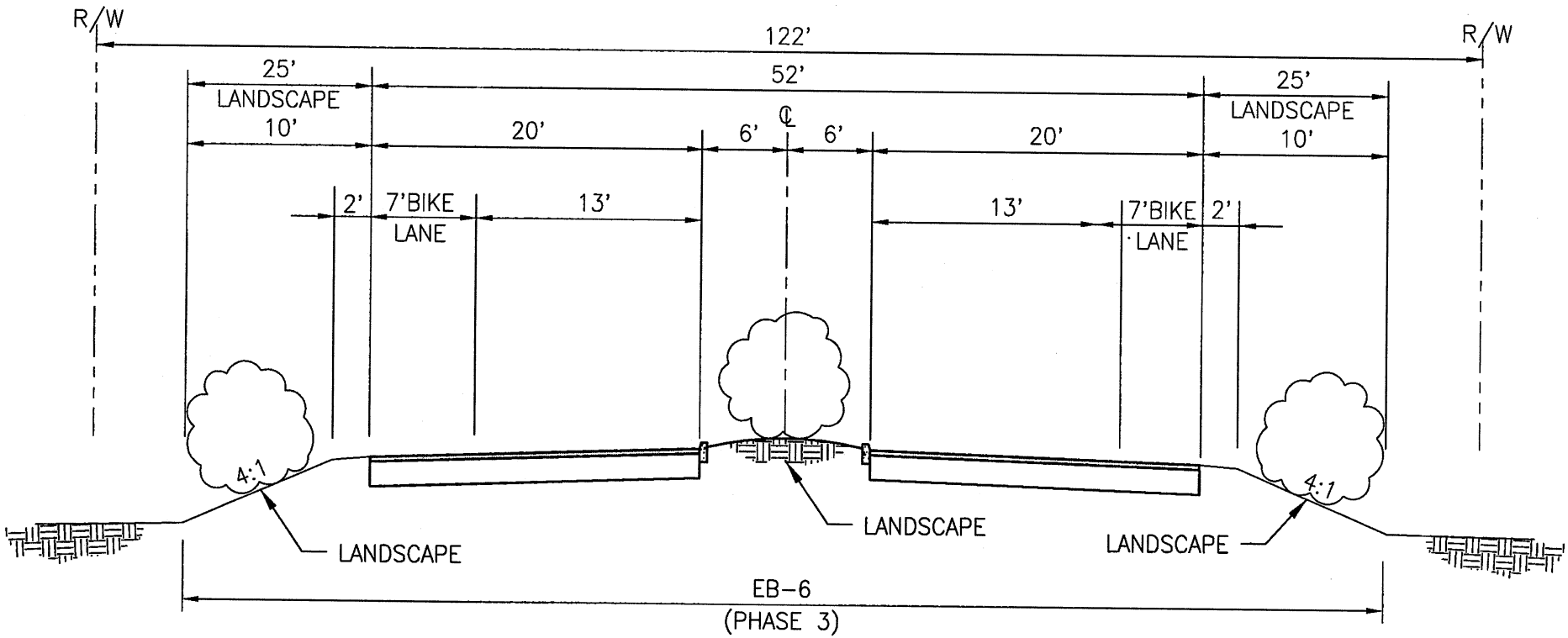

PERSONNEL	
Drafted by:	V. FALLIS
Designed by:	D. JABBOUR
Checked by:	D. JOHNSON
Scale:	N.T.S.

ELKHORN BOULEVARD

(AIRPORT BOULEVARD TO POWER LINE ROAD)

Stantec

Stantec Consulting Inc.
2590 Venture Oaks Way
Sacramento, CA 95833-3288
Tel. 916.569-2500
Fax. 916.921.9274
www.stantec.com

PROJECT No.
E B
6

V:\52844\Active\84471010\Exhibits\Volume 2 Exhibits\sect-02.dwg 5/21/03 10:10am btaylor

PROJECT NO. PHASE 1AA EB-7
ELKHORN BOULEVARD - Airport Boulevard/Crossfield Drive Interchange Fair Share Costs

Introduction

It is proposed to reimburse the Sacramento County Department of Airports for Metro Air Parks Fair Share of constructing the Airport Boulevard/Crossfield Drive Interchange with interest based on statutory rate.

Background

Ordinance No. SZC93-0045 requires Metro Air Park to extend Elkhorn Boulevard through the airport and connect to Airport Boulevard at the Airport Boulevard/Crossfield Drive Interchange and to fund any increase in the cost of the interchange due to the connection.

Existing Facilities

The Airport Boulevard/Crossfield Drive Interchange is substantially complete. A point of connection for Elkhorn Boulevard has been provided on the south side of Airport Boulevard at the ramp terminal intersection.

Proposed Facility

Interchange:	Reimburse Sacramento County Department of Airports the fair share costs of the Airport Boulevard/Crossfield Drive Interchange. Payment was made to SCAS from the 2004 A Bond proceeds in May of 2005.

Preliminary Estimate of Costs
For
Metro Air Park
Elkhorn Boulevard Surface Improvements
Phase 1AA
EB-7

May 2006

Item	Description	Quantity	Unit	Unit Price	Total
	(Airport Boulevard /Crossfield Drive Interchange)				
1.	Reimburse Sacramento County Dept. of Airports for Metro Airparks fair share of the interchange	1	JOB	$595,000.00	$595,000.00
	Total EB-7				$595,000.00
	Funded with Series 2004 A Bond Proceeds				$595,000.00

PROJECT NO. PHASE 4 ER-1
ELVERTA ROAD - Power Line Road to Lone Tree Road

Introduction

It is proposed to overlay the existing pavement and widen the road to one-lane arterial standards from Power Line Road to Metro Parkway, and two lane arterial standards from Metro Parkway to Lone Tree Road.

Background

This facility is the first project for this two and four-lane arterial section of Elverta Road to be constructed as a major roadway component of the Metro Air Park Facilities Financing Plan.

Existing Facility

Currently, Elverta Road is constructed between Power Line Road and Lone Tree Road with 26-feet of pavement within a 60-foot right-of-way. Project WTR-1 will exist at time of construction.

Proposed Facilities

Right-of-Way	In addition to the existing right-of-way on the north half, provide 31-feet of right of way for the south half from Power Line Road to Metro Parkway and 53-feet of right-of-way for the south half from Metro Parkway to Lone Tree Road.
Landscape Easement:	14-feet on the south side
Pavement:	Add nine-feet of pavement from Metro Parkway to Lone Tree Road.
Overlay:	26-foot wide overlay of the existing pavement of varying thickness in order to shift the crown to the centerline of the proposed right-of-way from Power Line Road to Lone Tree Road
Striping and Street Signs:	As required
Irrigation Canal Crossing:	Construct culvert at ultimate location and realign canal
Drainage System:	Construct drain pipe and drain manholes as shown on exhibit D-1 in volume 1 section F.
Sewer System:	Construct sewer pipe, sewer manholes, and sewer stubs as shown on exhibit S-1 in volume 1 section H.
Utilities:	Relocate existing power polls as required.

Preliminary Estimate of Costs
For
Metro Air Park
Elverta Road Surface Improvements
Phase 4
ER-1

May 2006

Item	Description	Quantity	Unit	Unit Price	Total
	(Power Line Road to Lone Tree Road, L = 5,300 LF)				
	(2 Lanes, Overlay Width = 26'; AC & AB Width = 9' - Metro Parkway to Lone Tree Road, L = 1,680 LF)				
1.	Clearing & Grubbing	33,400	SF	$0.13	$4,342.00
2.	Excavation	1,500	CY	$16.50	$24,750.00
3.	6.5"AC, 8" AB, & 15" Lime Treated	15,000	SF	$5.02	$75,300.00
4.	6.5"AC, 8" AB, & 15" Lime Treated (Exterior Paving at Power Line Road)	2,600	SF	$5.02	$13,052.00
5.	6.5"AC, 8" AB, & 15" Lime Treated (Exterior Paving at Metro Air Parkway)	15,800	SF	$5.02	$79,316.00
6.	AC Overlay	137,800	SF	$2.30	$316,940.00
7.	Power Pole Relocation	19	EA	$11,500.00	$218,500.00
8.	Roadside Ditch	10,600	LF	$2.20	$23,320.00
9.	Striping	10,600	LF	$7.15	$75,790.00
10.	Street Sign	5	EA	$380.00	$1,900.00
	Subtotal ER-1				$833,210.00
	Engineering 25% (Private)				$208,302.50
	Contingencies 15% (Private)				$124,981.50
11.	ROW Acquisition	1	AC	$50,000.00	$50,000.00
	Total ER-1				$1,216,494.00

Preliminary Estimate of Costs
For
Metro Air Park
Elverta Road Drainage Improvements
Phase 4
ER-1

October 2006

Item	Description	Quantity	Unit	Unit Price	Total
	(Metro Air Parkway to Lone Tree Road)				
1.	12" Storm Drain	440	LF	$55.00	$24,200.00
2.	15" Storm Drain	475	LF	$61.80	$29,355.00
3.	48" Manhole	2	EA	$3,021.30	$6,042.60
	Subtotal ER-1				$59,597.60
	Engineering 25% (Private)				$14,899.40
	Contingencies 15% (Private)				$8,939.64
	Total ER-1				$83,436.64

Preliminary Estimate of Costs
For
Metro Air Park
Elverta Road Sewer Improvements
Phase 4
ER-1

May 2006

Item	Description	Quantity	Unit	Unit Price	Total	CSD-1 Reimbursable Amount	Non-Reimbursable Amount
	(Metro Air Parkway to Lone Tree Road, L = 1,630 LF)						
1.	8" Sanitary Sewer 14'-18' Deep	1,650	LF	$103.58	$170,907.00	$0.00	$170,907.00
2	48" Manhole 14'-18' Deep	6	EA	$5,000.00	$30,000.00	$0.00	$30,000.00
3	Service Stubs	1	EA	$7,920.00	$7,920.00	$0.00	$7,920.00
	Subtotal ER-1				$208,827.00	$0.00	$208,827.00
	Engineering 25% (Private)				$52,206.75	$0.00	$52,206.75
	Contingencies 15% (Private)				$31,324.05	$0.00	$31,324.05
	Total ER-1				$292,357.80	$0.00	$292,357.80

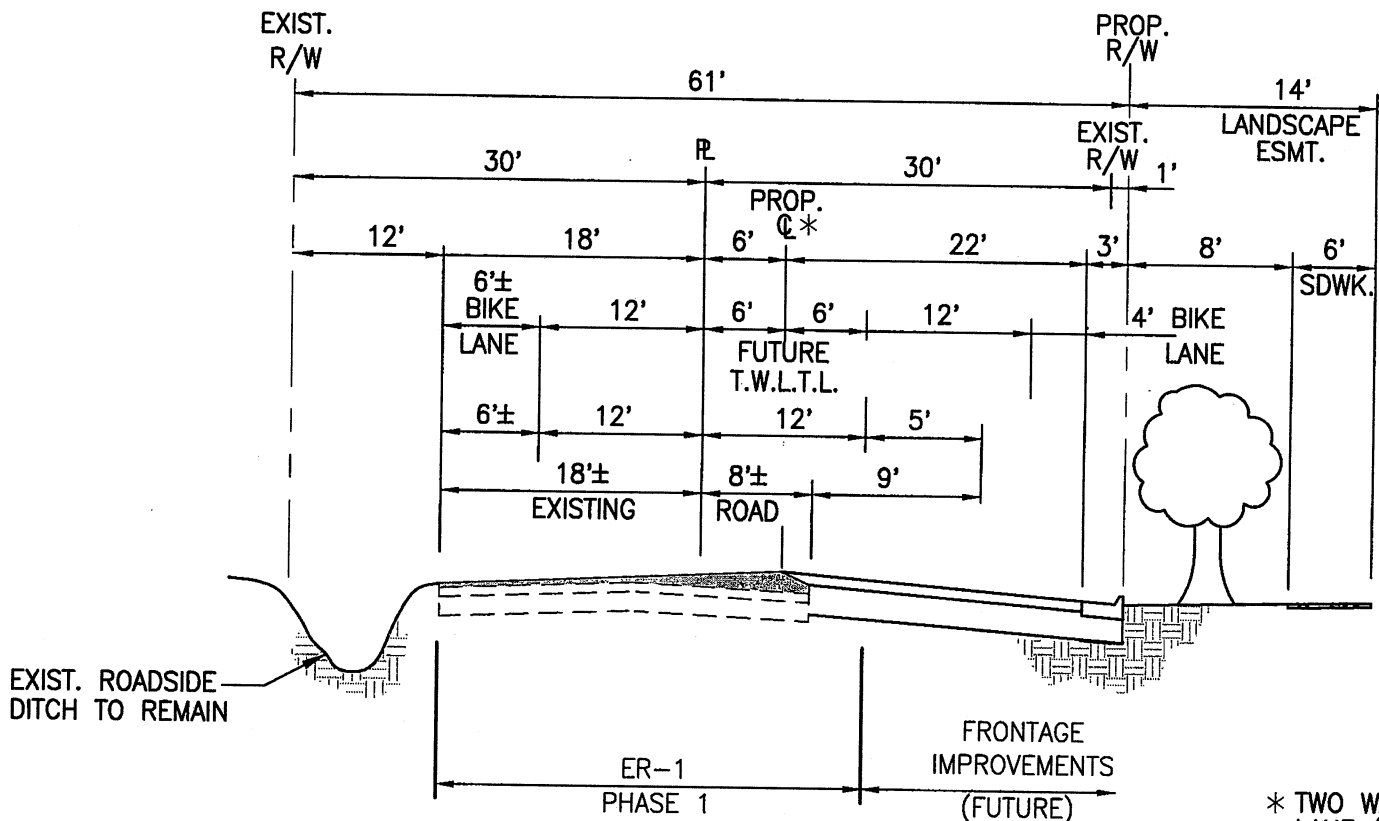

*SHIFT THE CENTERLINE SOUTH 3' AT THE METRO PARKWAY INTERSECTION

PERSONNEL	
Drafted by:	V. FALLIS
Designed by:	D. JABBOUR
Checked by:	D. JOHNSON
Scale:	N.T.S.

ELVERTA ROAD

(POWER LINE ROAD TO METRO PARKWAY)

Stantec

Stantec Consulting Inc.
2590 Venture Oaks Way
Sacramento, CA 95833-3288
Tel. 916.569-2500
Fax. 916.921.9274
www.stantec.com

PROJECT No.
E R
1

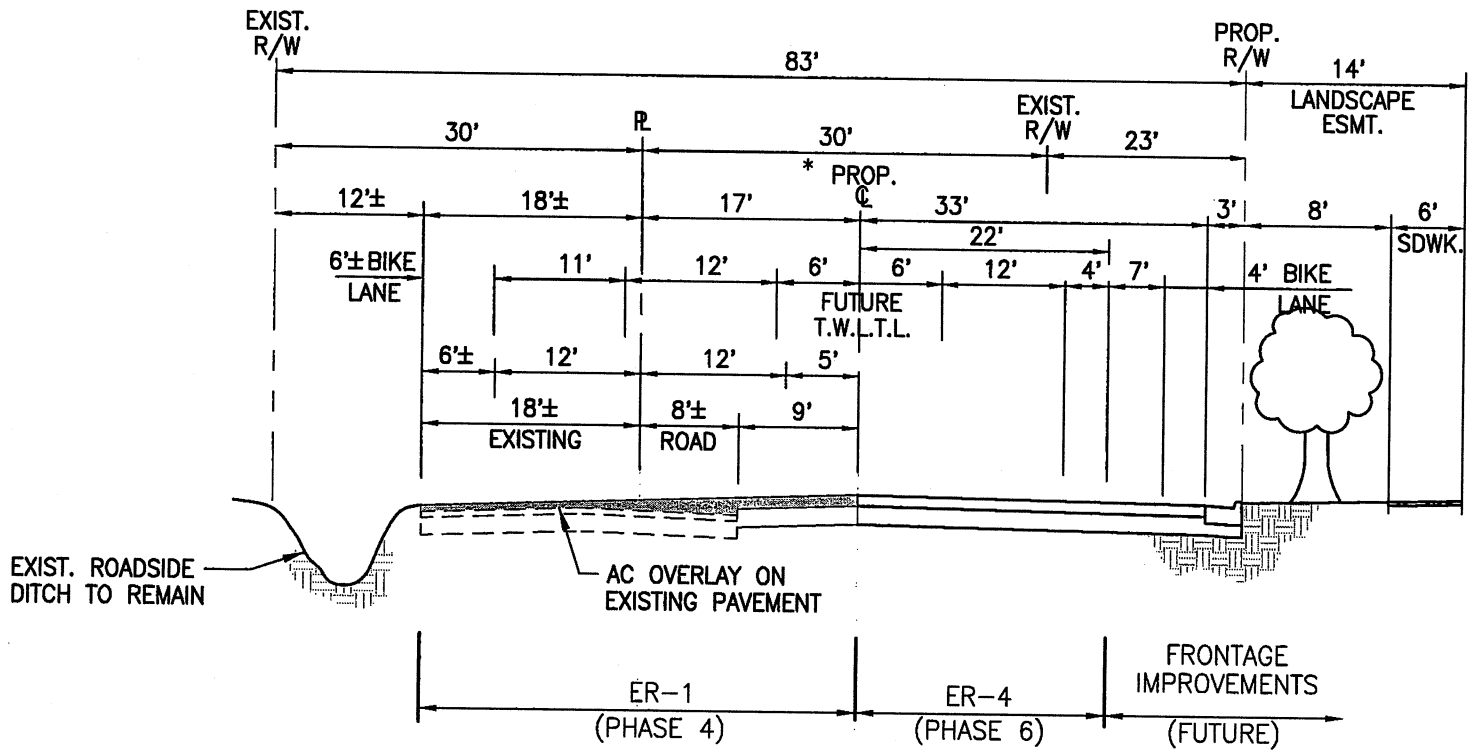

* SHIFT PROPOSED ROADWAY SOUTH 3' AT THE METRO PARKWAY INTERSECTION
* SHIFT PROPOSED ROADWAY SOUTH 10' AT THE LONE TREE ROAD INTERSECTION

PERSONNEL	
Drafted by:	V. FALLIS
Designed by:	D. JABBOUR
Checked by:	D. JOHNSON
Scale:	N.T.S.

ELVERTA ROAD

(METRO PARKWAY TO LONE TREE ROAD)

Stantec Consulting Inc.
2590 Venture Oaks Way
Sacramento, CA 95833-3288
Tel. 916.569-2500
Fax. 916.921.9274
www.stantec.com

PROJECT No.
E R
1 & 4

PROJECT NO. PHASE 4 ER-2
ELVERTA ROAD - Lone Tree Road to SR-99

Introduction

It is proposed to overlay the existing pavement and widen the road to two-lane arterial standards from Lone Tree Road to the westerly limits of the existing SR-99 intersection.

Background

This facility is the first project for this four-lane section of Elverta Road to be constructed as a major roadway component of the Metro Air Park Facilities Financing Plan.

Existing Facilities

Currently, Elverta Road is constructed between Lone Tree Road and SR-99 with 26-feet ± of pavement within a 60-foot right-of-way.

Proposed Facilities

Overlay:	26-foot wide overlay of existing pavement of varying thickness in order to shift the crown to the centerline of the proposed right-of-way
Pavement:	Add nine feet of pavement to the south side of the existing pavement to provide one 12-foot lane and a five-foot shoulder in each direction
Striping and Street Signs:	As required
Drainage:	Roadside ditch on each side with cross culverts at ultimate width as required
Canal Crossing:	Construct culvert as required
Utilities	Relocate existing power poles as required

Preliminary Estimate of Costs
For
Metro Air Park
Elverta Road Surface Improvements
Phase 4
ER-2

May 2006

Item	Description	Quantity	Unit	Unit Price	Total
	(Lone Tree Road to SR 99, L = 4,200 LF)				
	(2 Lanes, Overlay Width = 26', AC;AB Width = 9', Lone Tree Road to SR99, L = 4,200 LF)				
1.	Clearing & Grubbing	37,800	SF	$0.13	$4,914.00
2.	Excavation	1,900	CY	$75.00	$142,500.00
3.	7"AC, 9" AB, & 18" Lime Treated	37,800	SF	$5.51	$208,278.00
4.	AC Overlay	109,200	SF	$2.30	$251,160.00
5.	Power Pole Relocation	21	EA	$11,500.00	$241,500.00
6.	Roadside Ditch	8,400	LF	$2.20	$18,480.00
7.	Striping	4,200	LF	$7.15	$30,030.00
8.	Street Sign	2	EA	$380.00	$760.00
9.	Canal Crossing	1	EA	$46,200.00	$46,200.00
10.	Cross Culverts	5	EA	$2,750.00	$13,750.00
	Subtotal ER-2				$957,572.00
	Engineering 25% (Public)				$239,393.00
	Contingencies 33% (Public)				$315,998.76
	Total ER-2				$1,512,963.76

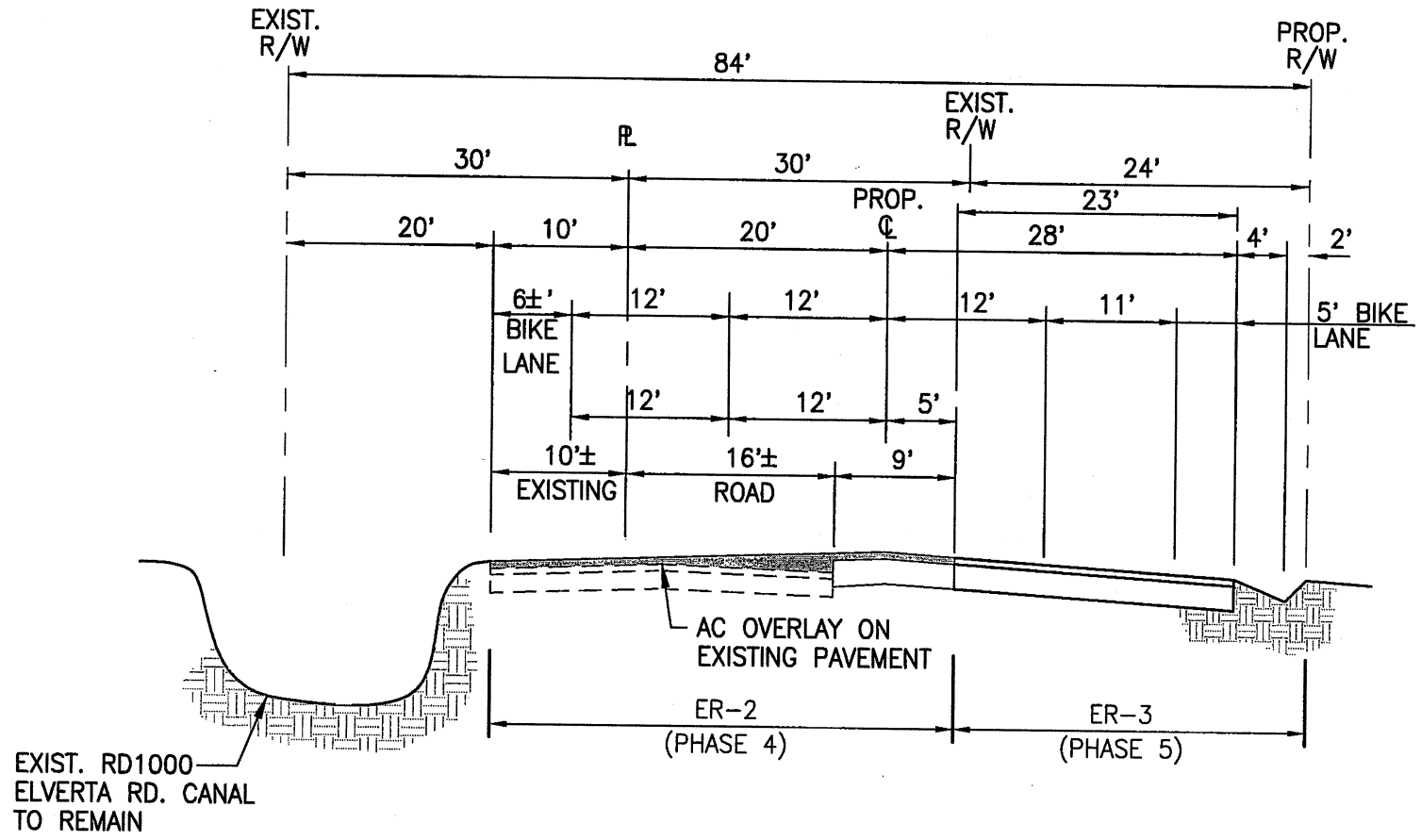

PERSONNEL	
Drafted by:	V. FALLIS
Designed by:	D. JABBOUR
Checked by:	D. JOHNSON
Scale:	N.T.S.

ELVERTA ROAD
(LONE TREE ROAD TO SR 99)

Stantec
Stantec Consulting Inc.
2590 Venture Oaks Way
Sacramento, CA 95833-3286
Tel. 916.569-2500
Fax. 916.921.9274
www.stantec.com

PROJECT No.
E R
2 & 3

Preliminary Estimate of Costs
For
Metro Air Park
Elverta Road Surface Improvements
Phase 5
ER-3

May 2006

Item	Description	Quantity	Unit	Unit Price	Total
	(Lone Tree Road to SR 99, L = 4,200 LF) (2 Lanes, Width = 23')				
1.	Clearing & Grubbing	102,300	SF	$0.13	$13,299.00
2.	Excavation	5,100	CY	$42.00	$214,200.00
3.	7"AC, 9" AB, & 18" Lime Treated	96,600	SF	$5.51	$532,266.00
4.	7"AC, 9" AB, & 18" Lime Treated (Interior Paving at Lone Tree Road)	5,300	SF	$5.51	$29,203.00
5.	7"AC, 9" AB, & 18" Lime Treated (Exterior Paving at Lone Tree Road)	400	SF	$5.51	$2,204.00
6.	Type 2 Curb & Gutter	80	LF	$24.20	$1,936.00
7.	Sidewalk	480	SF	$5.50	$2,640.00
8.	Left Turn Pocket Median	180	LF	$21.00	$3,780.00
9.	Roadside Ditch	8,400	LF	$2.20	$18,480.00
10.	Striping	4,200	LF	$7.15	$30,030.00
11.	Signalization @ Lone Tree Road	1	EA	$154,000.00	$154,000.00
	Subtotal ER-3				$1,002,038.00
	Engineering 25% (Public)				$250,509.50
	Contingencies 33% (Public)				$330,672.54
12.	ROW Acquisition	1.4	AC	$50,000.00	$70,000.00
	Total ER-3				$1,653,220.04

*Costs include Slurry Seal

PROJECT NO. PHASE 6 ER-4
ELVERTA ROAD – Metro Parkway to Lone Tree Road

Introduction

It is proposed to construct an additional lane of Elverta Road from Metro Parkway to Lone Tree Road.

Background

This facility is the final project for this two and four-lane arterial section of Elverta Road to be constructed as a major roadway component of the Metro Air Park Facilities Financing Plan.

Existing Facilities

Currently, Elverta Road is constructed between Power Line Road and Lone Tree Road with ±26 feet of pavement. Project ER-1 and WTR-1 will exist at the time of construction.

Proposed Facilities

Pavement:	Add 22-feet of pavement on the south side to provide a two-way left turn lane, one 12-foot lane and one west bound 11-foot lane with a four-foot bike lane on the south side and a five-foot bike lane on the north side from Metro Parkway to Lone Tree Road
Left Turn Pocket Median:	One each at Metro Parkway and Road "B"
Striping and Street Signs:	As required
Drainage:	Roadside ditch
Signalization Interconnect:	Road "B" to Lone Tree Road
Striping, Slurry Seal, and Street Signs:	As required

Preliminary Estimate of Costs
For
Metro Air Park
Elverta Road Surface Improvements
Phase 6
ER-4

May 2006

Item	Description	Quantity	Unit	Unit Price	Total
	(Metro Parkway to Lone Tree Road, L = 5,300 LF) (1 Lane, Width = 22', Metro Parkway to Lone Tree Road, L = 1,700 LF)				
1.	Clearing & Grubbing	43,300	SF	$0.13	$5,629.00
2.	Excavation	2,300	CY	$16.50	$37,950.00
3.	6.5"AC, 8" AB, & 15" Lime Treated	37,400	SF	$5.02	$187,748.00
4.	6.5" AC & 26" AB (Exterior Paving at Metro Air Parkway)	4,400	SF	$6.35	$27,940.00
5.	6.5" AC & 26" AB (Exterior Paving at Lone Tree Road)	1,500	SF	$6.35	$9,525.00
6.	Left Turn Pocket Median	360	LF	$21.00	$7,560.00
7.	Striping	5,300	LF	$7.15	$37,895.00
8.	Signalization Interconnect	3,900	LF	$11.00	$42,900.00
9.	Pavement Sawcut	5,300	LF	$2.20	$11,660.00
10.	Roadside Ditch	1,700	LF	$2.20	$3,740.00
	Subtotal ER-4				$372,547.00
	Engineering 25% (Private)				$93,136.75
	Contingencies 15% (Private)				$55,882.05
	Total ER-4				$521,565.80

*Costs include Slurry Seal

PROJECT PHASE 3 PLR-1
POWER LINE ROAD - I-5 Overcrossing to Elkhorn Boulevard

Introduction

It is proposed to overlay the existing pavement and widen the road to two-lane arterial standards from the I-5 overcrossing to Elkhorn Boulevard.

Background

This facility is the only project for this section of Power Line Road to be constructed as a major roadway component of the Metro Air Park Facilities Financing Plan.

Existing Facilities

Currently, Power Line Road is constructed to two-lane arterial standards from the I-5 Overcrossing to Elkhorn Boulevard within existing right-of-way of varying width. An existing drainage ditch is adjacent to the east side with a high pressure gas main, PT&T underground cable and overhead electric on the west side.

Proposed Facilities

Right-of-Way:	Existing right-of-way to remain from the I-5 overcrossing to Road "B". 22-feet of right-of-way from Road "B" to Elkhorn Boulevard on the project side with additional widening for intersections and bus turnouts. On the west side, right of way is assumed to be the edge of existing pavement.
Landscape Easement:	Varies from 54' to 82' from the I-5 overcrossing to Road "B". 14- feet from Road "B" to Elkhorn Boulevard.
Pavement:	Add 0 to 5-feet on the project side from I-5 overcrossing to Road "B" to provide a transition from no median to a 12' striped median at Road "B" with one 12-foot lane and one varying width bike lane each direction. Add 11-feet on the project side from Road "B" to Elkhorn Boulevard to provide a two-way left-turn lane, one 12-foot lane each direction, a five-foot bike lane on the west side and a four-foot bike lane on the project side.
Curb & Gutter:	Type 2 curb and gutter from I-5 Overcrossing to Road "B"
Overlay:	40-foot wide overlay from I-5 to Road "B" and 34-foot wide from Road "B" to Elkhorn Boulevard.
Striping and Street Signs:	As required

Water System:	Construct water mains, valves, stubs and appurtenances as shown on exhibit W-1 in volume 1 section I.
Street lighting	As required
Utilities	Relocate power polls as required
Drainage	Roadside Ditch

Preliminary Estimate of Costs
For
Metro Air Park
Power Line Road Surface Improvements
Phase 3
PLR-1

May 2006

Item	Description	Quantity	Unit	Unit Price	Total
	(I-5 Overcrossing to Elkhorn Boulevard, L = 1,700 LF) (2 Lanes, Overlay Width = 40', AC & AB Width = 0' to 5' I-5 Overcrossing to Road "B", L = 500 LF) (2 Lanes, Overlay Width = 34'; AC & AB Width = 11' Road "B" to Elkhorn Boulevard, L = 1,200 LF)				
1.	Clearing & Grubbing	14,450	SF	$0.13	$1,878.50
2.	Excavation	700	CY	$16.50	$11,550.00
3.	6"AC, 9" AB, & 12" Lime Treated	14,450	SF	$5.05	$72,972.50
4.	Type 2 Curb & Gutter	800	LF	$24.20	$19,360.00
5.	AC Overlay	60,800	SF	$2.30	$139,840.00
6.	Street Lighting	17	EA	$3,300.00	$56,100.00
7.	Power Pole Relocation	22	EA	$11,500.00	$253,000.00
8.	Street Sign	9	EA	$380.00	$3,420.00
9.	Striping	1,710	LF	$7.15	$12,226.50
10.	Striping	3,400	LF	$7.15	$24,310.00
11.	Roadside Ditch	3,400	LF	$2.20	$7,480.00
	Subtotal PLR-1				$602,137.50
	Engineering 25% (Private)				$150,534.38
	Contingencies 15% (Private)				$90,320.63
	Total PLR-1				$842,992.50

Preliminary Estimate of Costs
For
Metro Air Park
Power Line Road Water Improvements
Phase 3
PLR-1

May 2006

Item	Description	Quantity	Unit	Unit Price	Total
	(Road "B" to Elkhorn Boulevard, L= 1,200 LF)				
1.	12" Water Main Including Fire Hydrants	1,200	LF	$86.01	$103,212.00
2.	Service Stubs/Crossings	3	EA	$7,884.66	$23,653.98
	Subtotal PLR-1				$126,865.98
	Engineering 25% (Private)				$31,716.50
	Contingencies 15% (Private)				$19,029.90
	Total PLR-1				$177,612.37

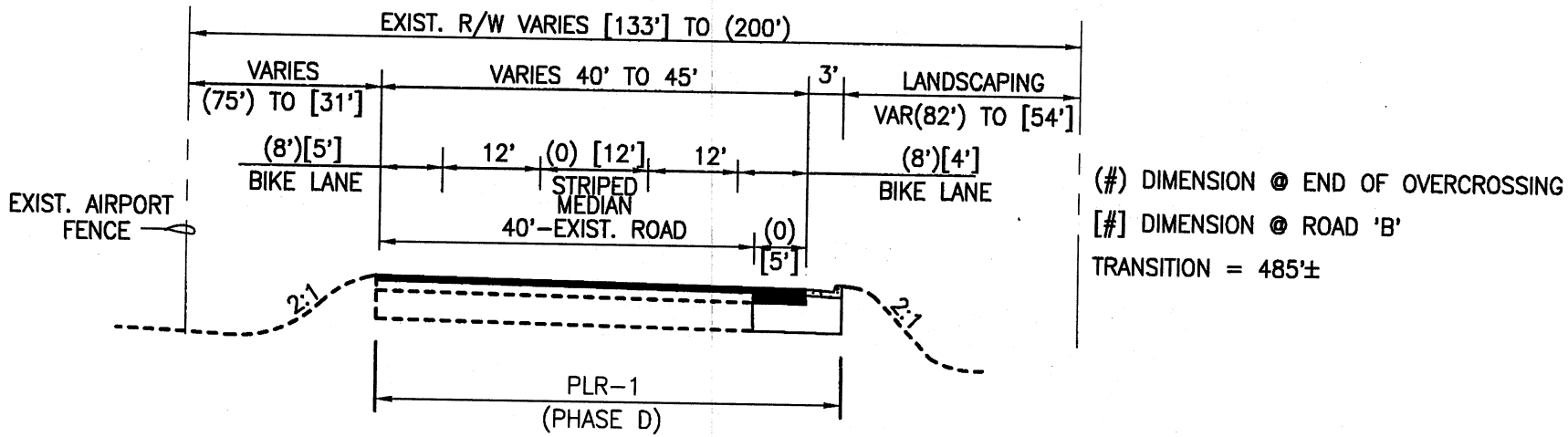

PERSONNEL	
Drafted by:	V. FALLIS
Designed by:	D. JABBOUR
Checked by:	D. JOHNSON
Scale:	N.T.S.

POWER LINE ROAD
(I-5 OVERCROSSING TO ROAD 'B')

Stantec
Stantec Consulting Inc.
2590 Venture Oaks Way
Sacramento, CA 95833-3288
Tel. 916.569-2500
Fax. 916.921.9274
www.stantec.com

PROJECT No.
P L R
1

PROJECT NO. PHASE 4 PLR-2
POWER LINE ROAD - Road "A" to Elverta Road

Introduction

It is proposed to reconstruct Power Line Road from Road "A" to the Central Main Canal to a one-lane arterial standard, and from the Central Main Canal to Elverta Road to a two-lane arterial standard.

Background

This facility is the only project for this one and two lane arterial section of Power Line Road to be constructed as a major roadway component of the Metro Air Park Facilities Financing Plan.

Existing Facilities

Currently, Power Line Road is constructed between Road "A" and Elverta Road with 16-feet of pavement and roadside ditches within an existing County right-of-way. From approximately 1200-feet south of Elverta Road to Elverta Road is an irrigation canal on the east side of Power Line Road. An overhead electric line also exists on the east side.

Proposed Facilities

Right-of-Way:	21-feet additional roadway R/W within the project boundary with additional intersection widening. On the west side right-of-way is assumed to be the edge of existing pavement. Eight-feet additional irrigation R/W on the east side for 1200 LF south of Elverta Road.
Landscape Easement:	14-feet east side only from the Central Main Canal to Elverta Road
Pavement:	45-feet to provide a two-way left turn lane, two 12-foot lanes, one 4-foot bike lane on the east side, one 5-foot bike lane on the west side with standard intersection widening from the Central Main Canal to Elverta Road. 29-foot from Road "A" to the Central Main Canal.
Curb and Gutter:	Type 2 on project side only from Central Main Canal to Elverta Road.
Striping, Slurry Seal, and Street Signs:	As required
Street Lighting:	Central Main Canal to Elverta Road
Irrigation Canal:	Relocate the irrigation canal as required

Water System:	Construct water mains, valves, stubs and appurtenances as shown on exhibit W-1 in volume 1 section I.
Utilities:	Relocate existing overhead electric line
Signalization	At Elverta Rd.
Signalization Interconnect	On Elverta, Power Line to Metro Parkway.
Drainage	Roadside Ditch

Preliminary Estimate of Costs
For
Metro Air Park
Power Line Road Surface Improvements
Phase 4
PLR-2

May 2006

Item	Description	Quantity	Unit	Unit Price	Total
	(Road "A" to Elverta Road, L = 2,300 LF) (2 lanes, "Highline" Ditch to Elverta Road, Width = 45') (1 lane, "Highline" Ditch to Road "A", Width =29')				
1.	Clearing & Grubbing	91,800	SF	$0.13	$11,934.00
2.	Excavation	4,300	CY	$16.50	$70,950.00
3.	6"AC, 9" AB, & 12" Chem & Lime Treated	88,800	SF	$5.25	$466,200.00
4.	6"AC, 9" AB, & 12" Chem & Lime Treated (Exterior Paving at Elverta Road)	3,000	SF	$5.25	$15,750.00
5.	Type 2 Curb & Gutter	1,200	LF	$24.20	$29,040.00
6.	Relocate Drainage Canal	1,200	LF	$27.50	$33,000.00
7.	Power Pole Relocation	9	EA	$11,500.00	$103,500.00
8.	Striping	4,600	LF	$7.15	$32,890.00
9.	Street Sign	4	EA	$380.00	$1,520.00
10.	Roadside Ditch	3,600	LF	$2.20	$7,920.00
11.	Street Lighting	12	EA	$3,300.00	$39,600.00
12.	Signalization	1	LS	$104,500.00	$104,500.00
13.	Signalization Interconnect	3,600	LF	$11.00	$39,600.00
	Subtotal PLR-2				$956,404.00
	Engineering 25% (Private)				$239,101.00
	Contingencies 15% (Private)				$143,460.60
	Total PLR-2				$1,338,965.60

*Costs include Slurry Seal

Preliminary Estimate of Costs
For
Metro Air Park
Power Line Road Water Improvements
Phase 4
PLR-2

May 2006

Item	Description	Quantity	Unit	Unit Price	Total
	Road "A" to Elverta Road (L = 2,300 LF)				
	Road "A" (Powerline Road to Intx of Roads "A" & "B")				
1	12" Water Main Including Fire Hydrants	3,450	LF	$86.01	$296,734.50
2	16" Water Main	1,150	LF	$115.00	$132,250.00
3	Service Stubs/Crossings	3	EA	$7,884.66	$23,653.98
	Subtotal PLR-2				$452,638.48
	Engineering 25% (Private)				$113,159.62
	Contingencies 15% (Private)				$67,895.77
	Total PLR-2				$633,693.87

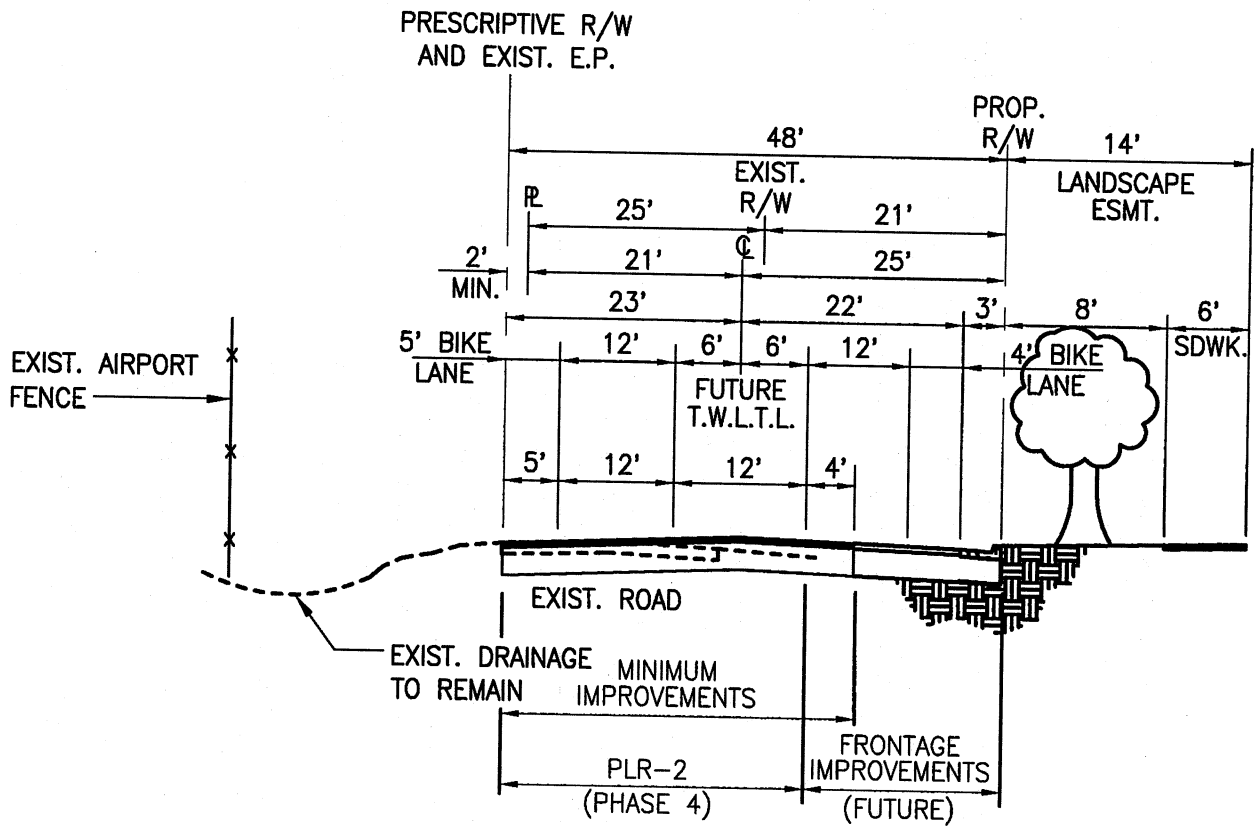

PERSONNEL	
Drafted by:	V. FALLIS
Designed by:	D. JABBOUR
Checked by:	D. JOHNSON
Scale:	N.T.S.

POWER LINE ROAD

(ROAD 'A' TO 1200' SOUTH OF ELVERTA ROAD)

Stantec

Stantec Consulting Inc.
2590 Venture Oaks Way
Sacramento, CA 95833-3288
Tel. 916.569-2500
Fax. 916.921.9274
www.stantec.com

PROJECT No.
P L R
2

Preliminary Estimate of Costs
For
Metro Air Park
Power Line Road Surface Improvements
Phase 6
PLR-3

May 2006

Item	Description	Quantity	Unit	Unit Price	Total
	(Del Paso Road to I-5 Overcrossing, L = 5,400 LF) (2 Lanes, AC;AB Width = 32' - Del Paso Rd to South Bayou Road, L = 4,900 LF) (2 Lanes, Overlay Width = 40' - South Bayou Road to I-5 Overcrossing, L = 500 LF)				
1.	Clearing & Grubbing	156,800	SF	$0.13	$20,384.00
2.	Excavation	7,300	CY	$16.50	$120,450.00
3.	6"AC, 9" AB, & 12" Lime Treated	156,800	SF	$5.05	$791,840.00
4.	AC Overlay	20,000	SF	$2.30	$46,000.00
5.	Roadside Ditch	5,500	LF	$2.20	$12,100.00
6.	Cross Culvert With CMP D.I.	900	LF	$110.00	$99,000.00
7.	Power Pole Relocation	44	EA	$11,500.00	$506,000.00
8.	Striping	5,400	LF	$7.15	$38,610.00
9.	Street Sign	3	EA	$380.00	$1,140.00
10.	Signalization @ S. Bayou Road	1	LS	$143,000.00	$143,000.00
11.	Relocate Drainage Canal	2,500	LF	$27.50	$68,750.00
	Subtotal PLR-3				$1,847,274.00
	Engineering 25% (Private)				$461,818.50
	Contingencies 15% (Private)				$277,091.10
12.	ROW Acquisition	2.5	AC	$50,000.00	$125,000.00
	Total PLR-3				$2,711,183.60

*Costs include Slurry Seal

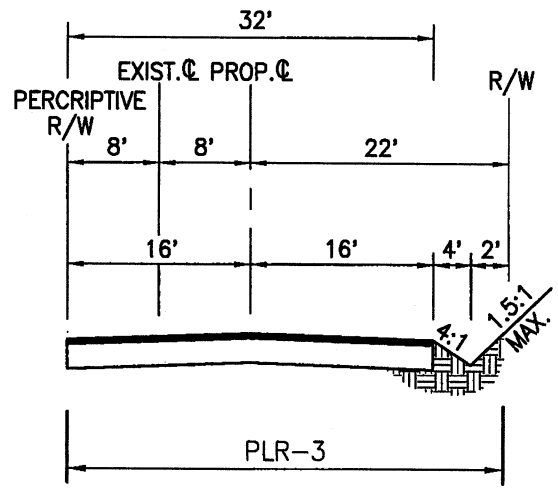

PERSONNEL	
Drafted by:	V. FALLIS
Designed by:	D. JABBOUR
Checked by:	D. JOHNSON
Scale:	N.T.S.

POWER LINE ROAD

(DEL PASO ROAD TO SOUTH BAYOU ROAD)

Stantec

Stantec Consulting Inc.
2590 Venture Oaks Way
Sacramento, CA 95833-3288
Tel. 916.569-2500
Fax. 916.921.9274
www.stantec.com

PROJECT No.
P L R
3

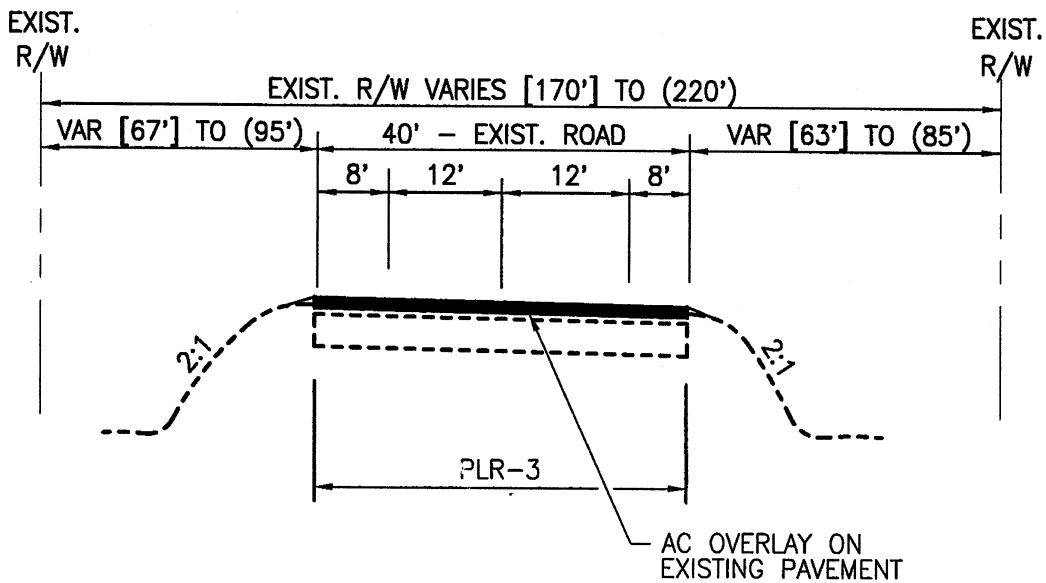

(#) DIMENSION AT END OF OVERCROSSING
[#] DIMENSION AT SOUTH BAYOU ROAD

PERSONNEL	
Drafted by:	V. FALLIS
Designed by:	D. JABBOUR
Checked by:	D. JOHNSON
Scale:	N.T.S.

POWER LINE ROAD
(SOUTH BAYOU TO I-5 OVERCROSSING)

Stantec
Stantec Consulting Inc.
2590 Venture Oaks Way
Sacramento, CA 95833-3288
Tel. 916.569-2500
Fax. 916.921.9274
www.stantec.com

PROJECT No.
P L R
3

PROJECT PHASE 4 LTR-1
LONE TREE ROAD - Meister Way to Elverta Road

Introduction

It is proposed to construct the center lanes of Lone Tree Road from Meister Way to Elverta Road.

Background

This facility is the first project for this four-lane arterial section of Lone Tree Road to be constructed as a major roadway component of the Metro Air Park Facilities Financing Plan.

Existing Facilities

Currently, no roadway facilities exist at this project location. A drainage ditch exists on the east side of the proposed right-of-way. Project WTR-2 will exist at time of construction.

Proposed Facilities

Right-of-Way:	47-feet within project boundary with additional widening for bus turnouts and intersections
Landscape Easement:	14-feet on west side only
Pavement:	34-feet to provide one 12-foot lane and a five-foot bike lane each direction
Striping and Street Signs:	As required
Drainage System:	Construct drain pipe, drain manholes, and roadside ditch as shown on exhibit D-1 in volume 1, section F.
Sewer System:	Construct sewer pipe, sewer manholes, and sewer stubs as shown on exhibit S-1 in volume 1, section H.
Water System:	Construct water mains, valves, stubs and appurtenances as shown on exhibit W-1, in volume 1 section I, from Meister Way to Elkhorn Boulevard.
Irrigation:	Canal Culvert

Preliminary Estimate of Costs
For
Metro Air Park
Lone Tree Road Surface Improvements
Phase 4
LTR-1

May 2006

Item	Description	Quantity	Unit	Unit Price	Total
	(Meister Way to Elverta Road, L = 13,200 LF) (2 Lanes, Width = 34')				
1.	Clearing & Grubbing	469,400	SF	$0.13	$61,022.00
2.	Excavation	21,300	CY	$16.50	$351,450.00
3.	6.5"AC, 8" AB, & 15" Lime Treated	317,000	SF	$5.02	$1,591,340.00
4.	6"AC, 9" AB, & 12" Lime Treated	131,800	SF	$5.05	$665,590.00
5.	6"AC, 9" AB, & 12" Lime Treated (Exterior Paving at Elverta Road)	4,000	SF	$5.05	$20,200.00
6.	6"AC, 8" AB, & 15" Lime Treated (Exterior Paving at Meister Way)	6,700	SF	$5.02	$33,634.00
7.	6"AC, 9" AB, & 12" Lime Treated (Exterior Paving at Elkhorn Boulevard)	9,900	SF	$5.05	$49,995.00
8.	Roadside Ditch	26,400	LF	$2.20	$58,080.00
9.	Street Sign	6	EA	$380.00	$2,280.00
10.	Striping	13,200	LF	$7.15	$94,380.00
	Subtotal LTR-1				$2,927,971.00
	Engineering 25% (Private)				$731,992.75
	Contingencies 15% (Private)				$439,195.65
	Total LTR-1				$4,099,159.40

Preliminary Estimate of Costs
For
Metro Air Park
Lone Tree Road Drainage Improvements
Phase 4
LTR-1

October 2006

Item	Description	Quantity	Unit	Unit Price	Total
	(Meister Way to Elverta Road)				
1.	Storm Drain Stub	25	EA	$6,179.93	$154,498.25
2.	48" Manhole	24	EA	$3,021.30	$72,511.20
3.	60" Manhole	10	EA	$4,943.94	$49,439.40
4.	60" Type A Saddle Manhole	3	EA	$6,591.92	$19,775.76
5.	12" Storm Drain	300	LF	$55.00	$16,500.00
6.	15" Storm Drain	2,720	LF	$61.80	$168,096.00
7.	21" Storm Drain	1,460	LF	$68.67	$100,258.20
8.	24" Storm Drain	1,640	LF	$75.53	$123,869.20
9.	27" Storm Drain	300	LF	$82.40	$24,720.00
10.	30" Storm Drain	2,360	LF	$89.00	$210,040.00
11.	36" Storm Drain	1,370	LF	$96.13	$131,698.10
12.	42" Storm Drain	1,400	LF	$109.87	$153,818.00
13.	66" Storm Drain	800	LF	$178.00	$142,400.00
14.	12" Cobbled Erosion Control Outlet	1	EA	$168.30	$168.30
	Subtotal LTR-1				$1,367,792.41
	Engineering 25% (Private)				$341,948.10
	Contingencies 15% (Private)				$205,168.86
	Total LTR-1				$1,914,909.37

Preliminary Estimate of Costs
For
Metro Air Park
Lone Tree Road Sewer Improvements
Phase 4
LTR-1

May 2006

Item	Description	Quantity	Unit	Unit Price	Total	CSD-1 Reimbursable Amount	Non-Reimbursable Amount
	(Meister Way to Elverta Road, L = 13,200 LF)						
1.	8" Sanitary Sewer 6'-10' Deep	500	LF	$85.00	$42,500.00	$0.00	$42,500.00
2.	8" Sanitary Sewer 10'-14' Deep	2,800	LF	$90.64	$253,792.00	$0.00	$253,792.00
3.	8" Sanitary Sewer 14'-18' Deep	2,730	LF	$103.58	$282,773.40	$0.00	$282,773.40
4.	8" Sanitary Sewer 18'-22' Deep	2,750	LF	$118.00	$324,500.00	$0.00	$324,500.00
6.	48" Manhole 6'-10' Deep	2	EA	$3,800.00	$7,600.00	$0.00	$7,600.00
7.	48" Manhole 10'-14' Deep	7	EA	$4,183.00	$29,281.00	$0.00	$29,281.00
8.	48" Manhole 14'-18' Deep	7	EA	$5,000.00	$35,000.00	$0.00	$35,000.00
9.	60" Manhole 18'-22' Deep	7	EA	$11,767.00	$82,369.00	$0.00	$82,369.00
10.	Service Stubs	24	EA	$7,920.00	$190,080.00	$0.00	$190,080.00
	Subtotal LTR-1				$1,247,895.40	$0.00	$1,247,895.40
	Engineering 25% (Private)				$311,973.85	$0.00	$311,973.85
	Contingencies 15% (Private)				$187,184.31	$0.00	$187,184.31
	Total LTR-1				$1,747,053.56	$0.00	$1,747,053.56

Preliminary Estimate of Costs
For
Metro Air Park
Lone Tree Road Water Improvements
Phase 4
LTR-1

May 2006

Item	Description	Quantity	Unit	Unit Price	Total
	(Meister Way to Elkhorn Boulevard, L = 2,700 LF)				
1.	12" Water Main Including Fire Hydrants	2,760	LF	$86.01	$237,387.60
2.	Service Stubs/Crossings	4	EA	$7,884.66	$31,538.64
	Subtotal LTR-1				$268,926.24
	Engineering 25% (Private)				$67,231.56
	Contingencies 15% (Private)				$40,338.94
	Total LTR-1				$376,496.74

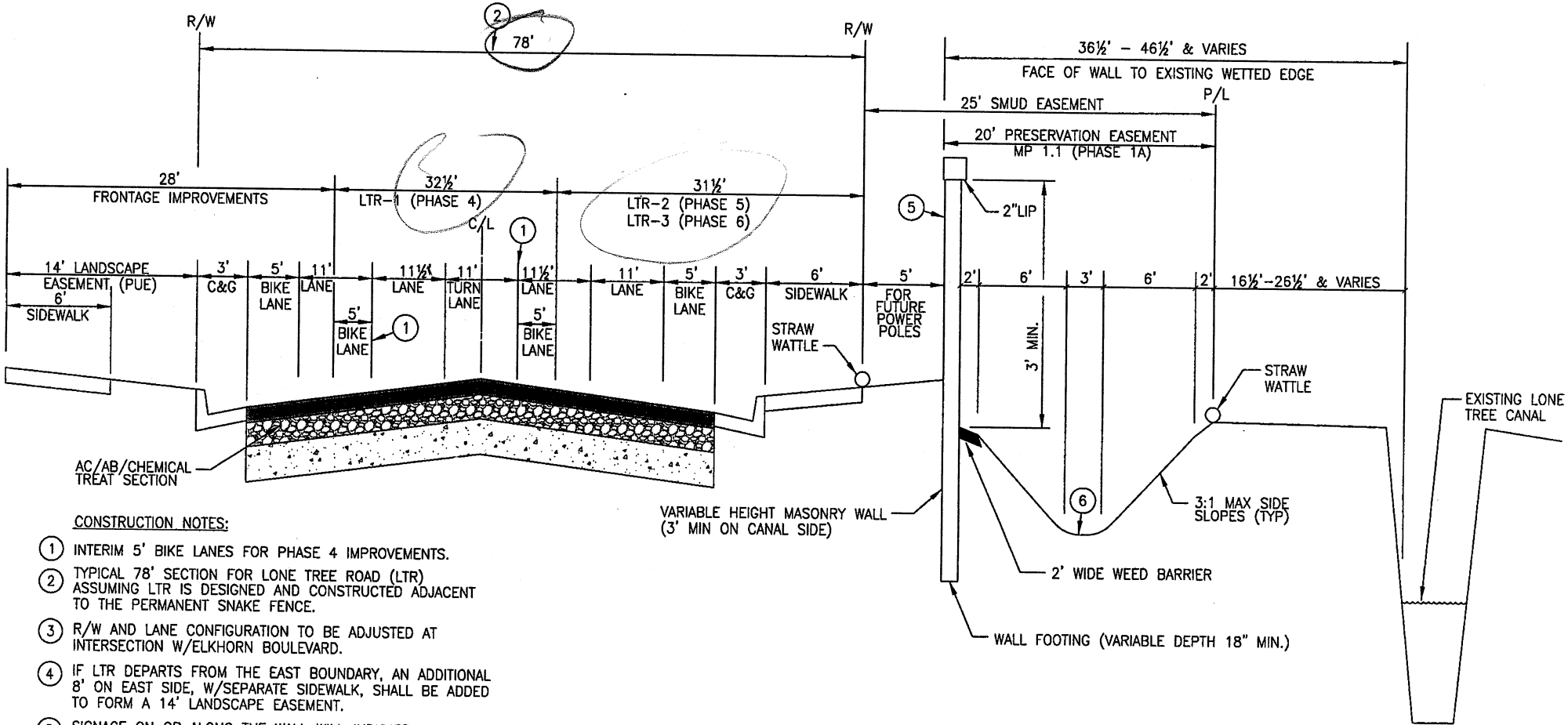

CONSTRUCTION NOTES:

1. INTERIM 5' BIKE LANES FOR PHASE 4 IMPROVEMENTS.
2. TYPICAL 78' SECTION FOR LONE TREE ROAD (LTR) ASSUMING LTR IS DESIGNED AND CONSTRUCTED ADJACENT TO THE PERMANENT SNAKE FENCE.
3. R/W AND LANE CONFIGURATION TO BE ADJUSTED AT INTERSECTION W/ELKHORN BOULEVARD.
4. IF LTR DEPARTS FROM THE EAST BOUNDARY, AN ADDITIONAL 8' ON EAST SIDE, W/SEPARATE SIDEWALK, SHALL BE ADDED TO FORM A 14' LANDSCAPE EASEMENT.
5. SIGNAGE ON OR ALONG THE WALL WILL INDICATE "WILDLIFE MITIGATION AREA – NO TRESSPASSING"
6. CHANNEL DEPTH SHALL VARY BETWEEN 1.5' TO 2' WITH AN AVERAGE DEPTH OF 1.5'.

Stantec

MEISTER WAY TO ELVERTA ROAD

Client/Project
METRO AIR PARK LLC

Title
LONE TREE ROAD
LTR 1, 2, & 3
MAY 2006
84471010

V:\52644\active\84471010\Exhibits\Volume 2 Exhibits\ex_ltr_071806.dwg 7/18/06 9:28am djabbour

PROJECT PHASE 5 LTR-2
LONE TREE ROAD - Road "F" to Road "A"

Introduction

It is proposed to construct Lone Tree Road from Road "F" to Meister Way to a two-lane arterial standard and to construct the exterior east lane from Meister Way to Road "A".

Background

This facility is the second project for this two and four-lane arterial section of Lone Tree Road to be constructed as a major roadway component of the Metro Air Park Facilities Financing Plan.

Existing Facilities

Currently, no roadway facility exists from Road "F" to Meister Way. A drainage ditch exists on the east side and project LTR-1, WTR-2 and WTR-6 will exist at time of construction.

Proposed Facilities

Right-of-Way:	48-feet from Road "F" to Meister Way with additional widening at intersections. Additional 17-feet on the adjacent parcel for a total of 52-feet from Road "F" to Meister Way and an additional 29 feet on the adjacent parcel for a total of 76 feet from Meister Way to Road "A". Right-of-way on adjacent parcels will be acquired.
Landscape Easement:	14-feet west side only
Pavement:	29-feet from Road "F" to Meister Way to provide a two-way left turn lane, one 12-foot lane, and a 5-foot shoulder on the east side. 23-feet on the east side for a total of 61-feet from Meister Way to Road "A" to provide a two-way left-turn lane, one 12-foot lane and one 11-foot on the east side and one 12-foot lane on the west side and a five-foot bike lane on each side.
Sidewalk:	At signalized intersections (Meister Way at four round corners)
Left Turn Pocket Median:	Two each at Meister Way and Elkhorn Boulevard
Striping, Slurry Seal, and Street Signs:	As required
Drainage Canal:	Relocate drainage canal

Signalization:	Meister Way at ultimate configuration
Signalization Interconnect:	Meister Way to Road "A"
Drainage	Roadside ditch

Preliminary Estimate of Costs
For
Metro Air Park
Lone Tree Road Surface Improvements
Phase 5
LTR-2

May 2006

Item	Description	Quantity	Unit	Unit Price	Total
	(Road "F" to Road "A", L = 10,500 LF)				
	(1 Lanes, Width = 23' - Meister Way to Road "A", L = 8,800 LF)				
	(1 Lanes, Width = 29' - Road "F" to Meister Way, L = 1,700 LF)				
1.	Clearing & Grubbing	267,800	SF	$0.13	$34,814.00
2.	Excavation	12,700	CY	$16.50	$209,550.00
3.	6.5"AC, 9" AB, & 15" Lime Treated	202,400	SF	$5.15	$1,042,360.00
4.	6"AC, 9" AB, & 12" Lime Treated	49,300	SF	$5.05	$248,965.00
5.	6.5"AC, 8" AB, & 15" Lime Treated (Exterior Paving at Elkhorn Boulevard)	2,300	SF	$5.02	$11,546.00
6.	6"AC, 9" AB, & 12" Lime Treated (Exterior Paving at Meister Way)	7,000	SF	$5.05	$35,350.00
7.	6"AC, 9" AB, & 12" Lime Treated (Interior Paving at Meister Way)	6,800	SF	$5.05	$34,340.00
8.	Sidewalk	1,920	SF	$5.50	$10,560.00
9.	Type 2 Curb & Gutter (easterly round corners)	160	LF	$24.20	$3,872.00
10.	Left Turn Pocket Median	720	LF	$21.00	$15,120.00
11.	Street Sign	2	EA	$380.00	$760.00
12.	Striping	8,800	LF	$7.15	$62,920.00
13.	Striping	1,700	LF	$7.15	$12,155.00
14.	Pavement Sawcut	8,800	LF	$2.20	$19,360.00
15.	Signalization @ Meister Way	1	LS	$181,500.00	$181,500.00
16.	Relocate Drainage Canal	8,800	LF	$27.50	$242,000.00
17.	Signalization Interconnect	8,800	LF	$11.00	$96,800.00
18.	Roadside Ditch	10,500	LF	$2.20	$23,100.00
	Subtotal LTR-2				$2,285,072.00
	Engineering 25% (Private)				$571,268.00
	Contingencies 15% (Private)				$342,760.80
19.	ROW Acquisition	7.5	AC	$50,000.00	$375,000.00
	Total LTR-2				$3,574,100.80

*Costs include Slurry Seal

PROJECT PHASE 6 LTR-3
LONE TREE ROAD - Road "A" to Elverta Road

Introduction

It is proposed to construct the east exterior lane of Lone Tree Road from Road "A" to Elverta Road.

Background

This facility is the final project for this two and four-lane arterial section of Lone Tree Road to be constructed as a major roadway component of the Metro Air Park Facilities Financing Plan.

Existing Facilities

Currently, no roadway facilities exist at this project location. A drainage ditch exists on the east side of the proposed right-of-way. Project LTR-1, LTR-2, WTR-2 and WTR-6 will exist at the time of construction.

Proposed Facilities

Pavement:	Add 23-feet on the east side from Road "A" to Elverta Road for a total of 61-feet to provide a two-way left-turn lane, one 12-foot lane and one 11-foot lane on the east side and a five-foot bike lane on the east side
Left Turn Pocket Median:	One at Elverta Road and two at Road "A"
Striping, Slurry Seal, and Street Signs:	As required
Drainage Canal:	Relocate drainage canal
Signalization:	Road "A" intersection at ultimate location
Signalization Interconnect:	Road "A" to Elverta Road
Sidewalk:	At signalized intersection
Drainage:	Roadside ditch

Preliminary Estimate of Costs
For
Metro Air Park
Lone Tree Road Surface Improvements
Phase 6
LTR-3

May 2006

Item	Description	Quantity	Unit	Unit Price	Total
	(Road "A" to Elverta Road, L = 4,400 LF)				
	(1 Lanes, Width = 16.5' - Road 'A' to Elverta Road, L = 4,400 LF)				
1.	Clearing & Grubbing	74,600	SF	$0.13	$9,698.00
2.	Excavation	3,400	CY	$16.50	$56,100.00
3.	6.5"AC, 8" AB, & 15" Lime Treated	72,600	SF	$5.02	$364,452.00
4.	6.5"AC, 8" AB, & 15" Lime Treated (Exterior Paving at Elverta Road)	2,000	SF	$5.02	$10,040.00
5.	Left Turn Pocket Median	180	LF	$21.00	$3,780.00
6.	Striping	4,400	LF	$7.15	$31,460.00
7.	Pavement Sawcut	4,400	LF	$2.20	$9,680.00
8.	Relocate Drainage Canal	6,100	LF	$27.50	$167,750.00
9.	Signalization Interconnect	6,100	LF	$11.00	$67,100.00
10.	Roadside Ditch	4,400	LF	$2.20	$9,680.00
11.	Signalization @ Road "A"	1	LS	$181,500.00	$181,500.00
12.	Sidewalk at Signalized Intersection	960	SF	$5.50	$5,280.00
	Subtotal LTR-3				$916,520.00
	Engineering 25% (Private)				$229,130.00
	Contingencies 15% (Private)				$137,478.00
13.	ROW Acquisition	3	AC	$50,000.00	$150,000.00
	Total LTR-3				$1,433,128.00

PROJECT PHASE 1AB LTR-4
LONE TREE ROAD SNAKE FENCE

Introduction

It is proposed to construct, along the eastern boundary of Metro Air Park, a snake wall and canal habitat.

Existing Facilities

Currently, no facilities exist at this project location.

Proposed Facilities

Snake Wall: It is proposed to construct a 3' high snake wall with a 2" lip adjacent to the proposed canal. The wall shall be constructed from Lone Tree Road To Elkhorn Blvd and from Meister way to the Caltrans Boundary. The wall shall incorporate signage to indicate "Wildlife Mitigation Area – No Trespassing"

Canal: It is proposed to construct a canal adjacent to the snake wall. The canal shall vary in depth between 1' and 2' with an average depth of 1.5'.

Preliminary Estimate of Costs
For
Metro Air Park
Lone Tree Road
Phase 1AB
LTR-4

October, 2006

Item	Description	Quantity	Unit	Unit Price	Total
	Lone Tree Road Snake Wall and Canal				
1.	Lone Tree Road Snake Fence	15,000	SF	$55.00	$1,610,000.00
	Subtotal LTR-4				$1,610,000.00
	Engineering 13.5% (Private)				$217,350.00
	Contingencies 10% (Private)				$161,000.00
	Construction Management 2.6% (Private)				$41,860.00
	Total LTR-4				$2,030,210.00

PROJECT PHASE 4 MW-1
MEISTER WAY - Road "B" to Lone Tree Road

Introduction

It is proposed to construct the center lanes of Meister Way from Road "B" to Lone Tree Road to two-lane arterial standards with widening for the Metro Parkway intersection.

Background

This facility is the first project for this section of Meister Way to be constructed as a major roadway component of the Metro Air Park Facilities Financing Plan.

Existing Facilities

Currently, no roadway facilities exist at this project location. An irrigation canal, drainage canal, Project DRN-1 and WTR-5 will exist and WTR-6 may exist within the proposed right-of-way at time of construction.

Proposed Facilities

Right-of-Way:	48-feet of right-of-way at Road "B" transitioning to 72-feet of right-of-way at Metro Parkway and extending to Lone Tree Road with additional widening for bus turnouts and intersections
Landscape Easement:	14-feet each side
Pavement:	34-feet of pavement to provide one 12-foot lane and one five-foot shoulder each direction plus intersection widening from Road "B" to Lone Tree Road
Striping and Street Signs:	As required
Monument Sign and Landscaping:	One at Lone Tree Road
Drainage Channel Crossing:	Box Culverts at proposed open channel crossings for ultimate roadway width.
Drainage Canal:	Relocate existing drainage canal outside proposed right-of-way or eliminate as required
Irrigation Canal:	Relocate existing irrigation canal outside proposed right-of-way or eliminate as required
Drainage System:	Construct drain pipe, drain manholes, and roadside ditch.

Sewer System:	Construct sewer pipe, sewer manholes, and sewer stubs as shown on exhibit S-1, in volume 1 section H.
Water System:	Construct water mains, valves, stubs and appurtenances as shown on exhibit W-1, in volume 1 section I.
Abandon Right-of-Way	Abandon R/W from Power Line Road to Lone Tree Road.

Preliminary Estimate of Costs
For
Metro Air Park
Meister Way Surface Improvements
Phase 4
MW-1

May 2006

Item	Description	Quantity	Unit	Unit Price	Total
	(Road "B" to Lone Tree Road, L = 3,400 LF) (2 Lanes, Width = 42' - Road "B" to Metro Air Parkway, L = 850 LF) (2 Lanes, Width = 34' - Metro Air Parkway to Lone Tree Road, L = 2,550 LF)				
1.	Clearing & Grubbing	152,000	SF	$0.13	$19,760.00
2.	Excavation	6,800	CY	$16.50	$112,200.00
3.	6.5"AC, 8" AB, & 15" Lime Treated	122,400	SF	$5.02	$614,448.00
4.	6.5"AC, 8" AB, & 15" Lime Treated (Exterior Paving at Metro Air Parkway)	26,200	SF	$5.02	$131,524.00
5.	6.5"AC, 8" AB, & 15" Lime Treated (Exterior Paving at Lone Tree Road)	3,400	SF	$5.02	$17,068.00
6.	Monument Signs and Landscaping	1	EA	$220,000.00	$220,000.00
7.	Roadside Ditch	6,800	LF	$2.20	$14,960.00
8.	Striping	3,400	LF	$7.15	$24,310.00
9.	Street Sign	6	EA	$380.00	$2,280.00
10.	Relocate Drainage Canal	3,400	LF	$27.50	$93,500.00
11.	Relocate Irrigation Canal	3,400	LF	$7.70	$26,180.00
	Subtotal MW-1				$1,276,230.00
	Engineering 25% (Private)				$319,057.50
	Contingencies 15% (Private)				$191,434.50
12.	Abandon R/W	4.3	AC	$5,000.00	$21,500.00
	Total MW-1				$1,808,222.00

Preliminary Estimate of Costs
For
Metro Air Park
Meister Way Drainage Improvements
Phase 4
MW-1

October 2006

Item	Description	Quantity	Unit	Unit Price	Total
	(Road "B" to Lone Tree Road)				
1.	42" Storm Drain	1,050	LF	$109.87	$115,363.50
2.	60" Manhole	2	EA	$4,943.94	$9,887.88
3.	12" Cobbled Erosion Control Outlet	1	EA	$168.30	$168.30
4.	36" CMP Culvert	115	LF	$69.30	$7,969.50
5.	Culvert Erosion Control (MW-1)	1	EA	$40,000.00	$40,000.00
6.	42" O.S. W/R-17 T.R. & E.C.	1	EA	$5,742.00	$5,742.00
	Subtotal MW-1				$179,131.18
	Engineering 25% (Private)				$44,782.80
	Contingencies 15% (Private)				$26,869.68
	Total MW-1				$250,783.65

Preliminary Estimate of Costs
For
Metro Air Park
Meister Way Sewer Improvements
Phase 4
MW-1

May 2006

Item	Description	Quantity	Unit	Unit Price	Total	CSD-1 Reimbursable Amount	Non-Reimbursable Amount
	Meister Way (Road "B" to Lone Tree Road, L = 3,400 LF)						
1	8" Sanitary Sewer 14'-18' Deep	900	LF	$103.58	$93,222.00	$0.00	$93,222.00
2	8" Sanitary Sewer 18'-22' Deep	895	LF	$118.00	$105,610.00	$0.00	$105,610.00
3	12" Sanitary Sewer 22'-26' Deep	838	LF	$230.00	$192,740.00	$0.00	$192,740.00
4	60" Manhole 14'-18' Deep	3	EA	$6,930.00	$20,790.00	$0.00	$20,790.00
5	60" Manhole 18'-22' Deep	2	EA	$11,767.00	$23,534.00	$0.00	$23,534.00
6	60" Manhole 18'-22' Deep	3	EA	$11,767.00	$35,301.00	$0.00	$35,301.00
7	Service Stubs	4	EA	$7,920.00	$31,680.00	$0.00	$31,680.00
	Subtotal MW-1				$502,877.00	$0.00	$502,877.00
	Engineering 25% (Private)				$125,719.25	$0.00	$125,719.25
	Contingencies 15% (Private)				$75,431.55	$0.00	$75,431.55
	Total MW-1				$704,027.80	$0.00	$704,027.80

Preliminary Estimate of Costs
For
Metro Air Park
Meister Way Water Improvements
Phase 4
MW-1

May 2006

Item	Description	Quantity	Unit	Unit Price	Total
	(Road "B" to Lone Tree Road, L = 3,400 LF)				
1.	12" Water Main Including Fire Hydrants	1,200	LF	$86.01	$103,212.00
2.	16" Water Main	1,200	LF	$115.00	$138,000.00
3.	Service Stubs	5	EA	$9,042.15	$45,210.75
	Subtotal MW-1				$286,422.75
	Engineering 25% (Private)				$71,605.69
	Contingencies 15% (Private)				$42,963.41
	Total MW-1				$400,991.85

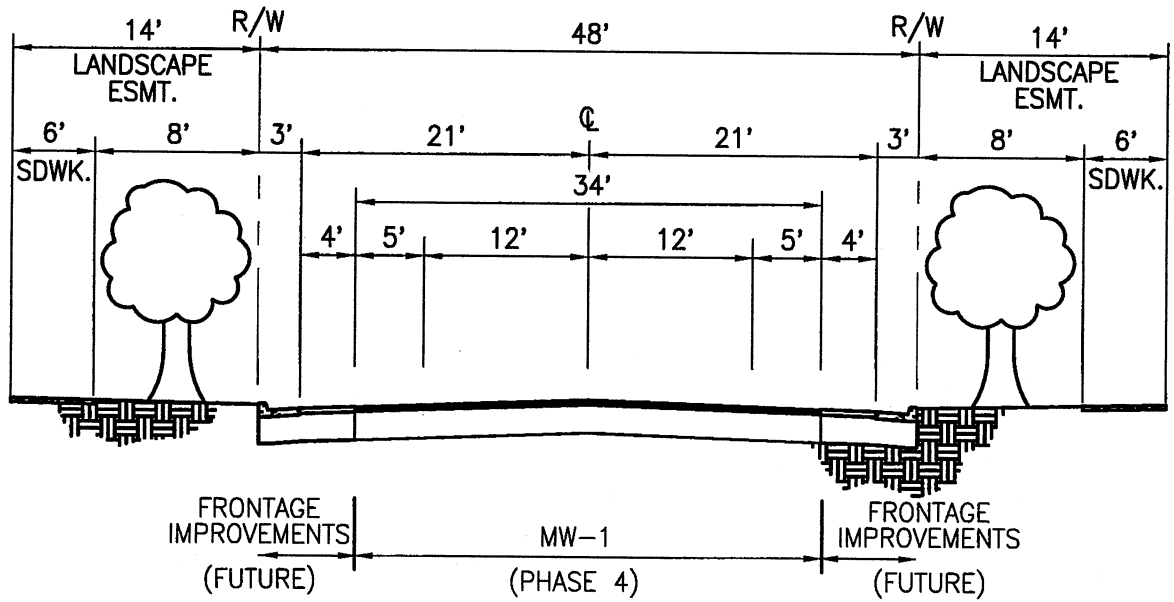

PERSONNEL	
Drafted by:	V. FALLIS
Designed by:	D. JABBOUR
Checked by:	D. JOHNSON
Scale:	N.T.S.

MEISTER WAY
(ROAD 'B' TO METRO PARKWAY)

Stantec
Stantec Consulting Inc.
2590 Venture Oaks Way
Sacramento, CA 95833-3288
Tel. 916.569-2500
Fax. 916.921.9274
www.stantec.com

PROJECT No.
M W
1

V: \52844\Active\84471010\Exhibits\Volume 2 Exhibits\sect-17.dwg 5/30/03 11:03am cskinner

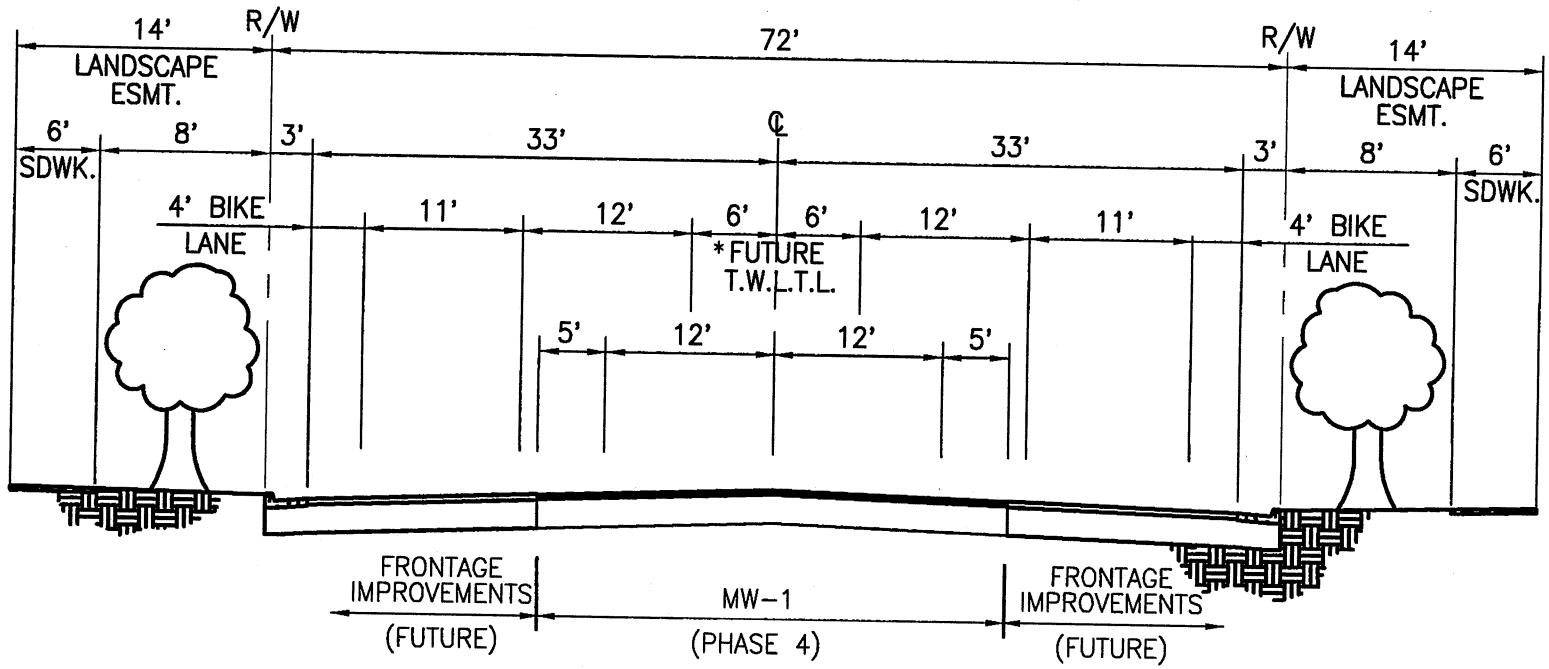

* TWO WAY LEFT TURN LANE

PERSONNEL	
Drafted by:	V. FALLIS
Designed by:	D. JABBOUR
Checked by:	D. JOHNSON
Scale:	N.T.S.

MEISTER WAY

(METRO PARKWAY TO LONE TREE ROAD)

Stantec

Stantec Consulting Inc.
2590 Venture Oaks Way
Sacramento, CA 95833-3288
Tel. 916.569-2500
Fax. 916.921.9274
www.stantec.com

PROJECT No.
M W
1

PROJECT PHASE 6 MW-2
MEISTER WAY - Lone Tree Road to SR-99

Introduction

It is proposed to construct the center lanes of Meister Way from Lone Tree Road to the westerly limits of the SR-99 overcrossing to two-lane arterial standards.

Background

This facility is the first project for this four-lane section of Meister Way to be constructed as a fair share major roadway component of the Metro Air Park Facilities Financing Plan.

Existing Facilities

Currently, no facilities exist at this project location except two canals that are to be crossed.

Proposed Facilities

Right-of-Way:	46-feet with additional widening at bus turnouts and intersections
Pavement:	34-feet of pavement to provide one 12-foot lane and one five-foot shoulder each direction
Striping and Street Signs:	As required
Drainage:	Roadside ditch each side with cross culverts as required
Irrigation Canal:	Construct culvert at canals to ultimate width

Preliminary Estimate of Costs
For
Metro Air Park
Meister Way Surface Improvements
Phase 6
MW-2

May 2006

Item	Description	Quantity	Unit	Unit Price	Total
	(Lone Tree Road to SR 99, L = 4,400 LF) (2 Lanes, Width = 34')				
1.	Clearing & Grubbing	166,800	SF	$0.13	$21,684.00
2.	Excavation	7,100	CY	$42.00	$298,200.00
3.	6.5"AC, 8" AB, & 15" Lime Treated	149,600	SF	$5.02	$750,992.00
4.	6.5"AC, 8" AB, & 15" Lime Treated (Exterior Paving at Lone Tree Road)	8,400	SF	$5.02	$42,168.00
5.	Roadside Ditch	8,800	LF	$2.20	$19,360.00
6.	Striping	4,400	LF	$7.15	$31,460.00
7.	Street Sign	2	EA	$380.00	$760.00
8.	Irrigation Canal Culvert	2	EA	$46,200.00	$92,400.00
9.	ROW Acquisition	6.9	AC	$50,000.00	$345,000.00
10.	Cross Culverts	5	EA	$2,750.00	$13,750.00
	Subtotal MW-2 (Year 2003)				$1,615,774.00
	44% Fair Share MW-2				$710,940.56
	Engineering 25% (Public)				$177,735.14
	Contingencies 33% (Public)				$234,610.38
	Total MW-2				$1,123,286.08

PROJECT PHASE 6 MW-3
MEISTER WAY - Lone Tree Road to SR-99

Introduction

It is proposed to construct the exterior lanes of Meister Way from Lone Tree Road to the westerly limits of the SR-99 interchange as a four-lane road.

Background

This facility is the final project for this four-lane section of Meister Way to be constructed as a fair share major roadway component of the Metro Air Park Facilities Financing Plan.

Existing Facilities

Currently, no facilities exist at this project location. Project MW-2 will exist at the time of construction.

Proposed Facilities

Right-of-Way:	68-feet with additional widening at bus turnouts and intersections
Pavement:	Add 11-feet to each side of pavement constructed for project MW-2 to provide two 12-foot lanes, two 11-foot lanes and two five-foot bike lanes plus standard intersection widening as required
Striping and Street Signs:	As required
Drainage:	Roadside ditches each side with cross culverts as required

Preliminary Estimate of Costs
For
Metro Air Park
Meister Way Surface Improvements
Phase 6
MW-3

May 2006

Item	Description	Quantity	Unit	Unit Price	Total
	(Lone Tree Road to SR 99, L = 4,400 LF)				
	(2 Lanes, Width = 22' - Lone Tree to SR 99, L = 4,400 LF)				
1.	Clearing & Grubbing	99,800	SF	$0.13	$12,974.00
2.	Excavation	4,500	CY	$42.00	$189,000.00
3.	6.5"AC, 8" AB, & 15" Lime Treated	96,800	SF	$5.02	$485,936.00
4.	6.5"AC, 8" AB, & 15" Lime Treated (Exterior Paving at Lone Tree Road)	3,000	SF	$5.02	$15,060.00
5.	Striping	4,400	LF	$7.15	$31,460.00
6.	Pavement Sawcut	8,800	LF	$2.20	$19,360.00
7.	Roadside Ditch	8,800	LF	$2.20	$19,360.00
8.	ROW Acquisition	1.9	AC	$50,000.00	$95,000.00
	Subtotal MW-3 (Year 2003)				$868,150.00
	44% Fair Share MW-3				$381,986.00
	Engineering 25% (Public)				$95,496.50
	Contingencies 33% (Public)				$126,055.38
	Total MW-3				$603,537.88

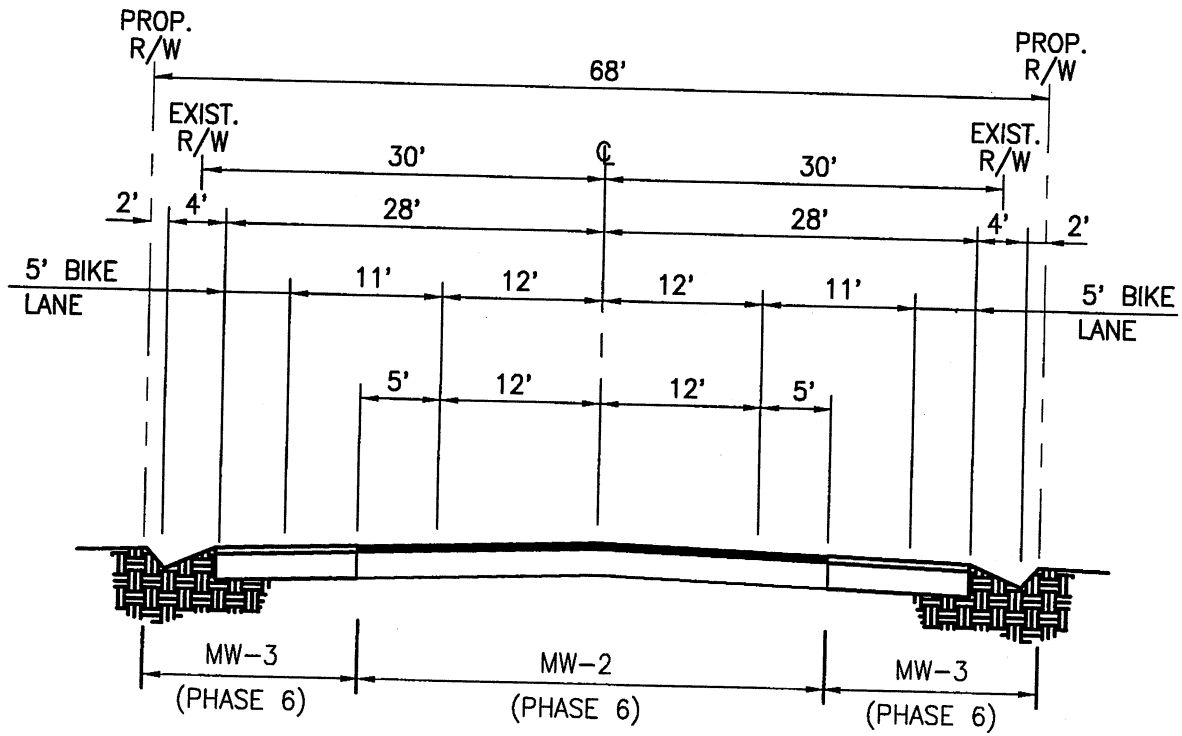

PERSONNEL	
Drafted by:	V. FALLIS
Designed by:	D. JABBOUR
Checked by:	D. JOHNSON
Scale:	N.T.S.

MEISTER WAY
(LONE TREE ROAD TO SR 99)

Stantec
Stantec Consulting Inc.
2590 Venture Oaks Way
Sacramento, CA 95833-3288
Tel. 916.569-2500
Fax. 916.921.9274
www.stantec.com

PROJECT No.
M W
2 & 3

PROJECT PHASE 4 RA-1
ROAD "A" - Metro Parkway to Lone Tree Road

Introduction

It is proposed to construct the center lanes from Metro Parkway to Lone Tree Road to two-lane arterial standards.

Background

This facility is the only project for this two and four-lane arterial section of Road "A" to be constructed as a major roadway component of the Metro Air Park Facilities Financing Plan.

Existing Facilities

Currently, no facilities exist at this project location. Project WTR-3 will exist at time of construction.

Proposed Facilities

Right-of-Way:	72-feet from Metro Parkway to Lone Tree Road with additional widening at bus turnouts and intersections
Landscape Easement:	18-feet each side
Pavement:	34-feet from Metro Parkway to Lone Tree Road to provide one 12-foot lane and one five-foot shoulder each direction
Left Turn Pocket Median:	Two at Metro Parkway
Monument Signs and Landscaping:	Four at Metro Parkway
Striping and Street Signs:	As required
Drainage System:	Construct drain pipe, drain manholes, and roadside ditch as shown on exhibit D-1, in volume 1 section F.
Sewer System:	Construct sewer pipe, sewer manholes, and sewer stubs as shown on exhibit S-1, in volume 1 section H.
Curb & Gutter	At signalized intersections

Preliminary Estimate of Costs
For
Metro Air Park
Road "A" Surface Improvements
Phase 4
RA-1

May 2006

Item	Description	Quantity	Unit	Unit Price	Total
	(Metro Air Parkway to Lone Tree Road, L = 5,600 LF)				
	(2 Lanes, Width = 34' - Metro Air Parkway to Lone Tree Road, L = 2,300 LF)				
1.	Clearing & Grubbing	97,500	SF	$0.13	$12,675.00
2.	Excavation	3,500	CY	$16.50	$57,750.00
3.	5.5"AC, 6" AB, & 12" Lime Treated	78,200	SF	$4.50	$351,900.00
4.	5.5"AC, 6" AB, & 12" Lime Treated (Exterior Paving at Metro Air Parkway)	9,800	SF	$4.50	$44,100.00
5.	5.5"AC, 6" AB, & 12" Lime Treated (Exterior Paving at Lone Tree Road)	9,500	SF	$4.50	$42,750.00
6.	Left Turn Pocket Median	360	LF	$21.00	$7,560.00
7.	Curb and Gutter at Signalized Intersectio	480	LF	$24.20	$11,616.00
8.	Monument Signs and Landscaping	4	EA	$220,000.00	$880,000.00
9.	Striping	5,600	LF	$7.15	$40,040.00
10.	Street Sign	7	EA	$380.00	$2,660.00
11.	Roadside Ditch	4,600	LF	$2.20	$10,120.00
	Subtotal RA-1				$1,461,171.00
	Engineering 25% (Private)				$365,292.75
	Contingencies 15% (Private)				$219,175.65
	Total RA-1				$2,045,639.40

Preliminary Estimate of Costs
For
Metro Air Park
Road "A" Drainage Improvements
Phase 4
RA-1

October 2006

Item	Description	Quantity	Unit	Unit Price	Total
	Road "A" (Metro Air Parkway to Lone Tree Road)				
1.	21" Storm Drain	250	LF	$68.67	$17,167.50
2.	24" Storm Drain	840	LF	$75.53	$63,445.20
3.	30" Storm Drain	640	LF	$89.00	$56,960.00
4.	36" Storm Drain	400	LF	$96.13	$38,452.00
5.	Storm Drain Stub	3	EA	$6,179.93	$18,539.79
6.	48" Manhole	4	EA	$3,021.30	$12,085.20
7.	60" Manhole	2	EA	$4,943.94	$9,887.88
8.	RC Junction Box	1	EA	$17,853.12	$17,853.12
9.	30" O.S. W/Trash Rack (R-16)	1	EA	$3,514.50	$3,514.50
10.	36" O.S. W/Trash Rack (R-17)	1	EA	$4,455.00	$4,455.00
11.	30" CMP Culvert	110	LF	$64.35	$7,078.50
12.	36" CMP Culvert	115	LF	$69.30	$7,969.50
13.	Culvert Erosion Control (RA-1)	2	EA	$6,866.58	$13,733.16
	Subtotal RA-1				$271,141.35
	Engineering 25% (Private)				$67,785.34
	Contingencies 15% (Private)				$40,671.20
	Total RA-1				$379,597.89

Preliminary Estimate of Costs
For
Metro Air Park
Road "A" Sewer Improvements
Phase 4
RA-1

May 2006

Item	Description	Quantity	Unit	Unit Price	Total	CSD-1 Reimbursable Amount	Non-Reimbursable Amount
	(Metro Air Parkway to Lone Tree Road, L = 2,500 LF)						
1.	10" Sanitary Sewer 18'-22' Deep	1,215	LF	$145.00	$176,175.00	$0.00	$176,175.00
2.	10" Sanitary Sewer 22'-26' Deep	1,215	LF	$160.00	$194,400.00	$0.00	$194,400.00
3.	60" Manhole 18'-22' Deep	4	EA	$11,767.00	$47,068.00	$0.00	$47,068.00
4.	60" Manhole 22'-26' Deep	4	EA	$15,304.00	$61,216.00	$0.00	$61,216.00
5.	Service Stubs	7	EA	$7,920.00	$55,440.00	$0.00	$55,440.00
	Subtotal RA-1				$534,299.00	$0.00	$534,299.00
	Engineering 25% (Private)				$133,574.75	$0.00	$133,574.75
	Contingencies 15% (Private)				$80,144.85	$0.00	$80,144.85
	Total RA-1				$748,018.60	$0.00	$748,018.60

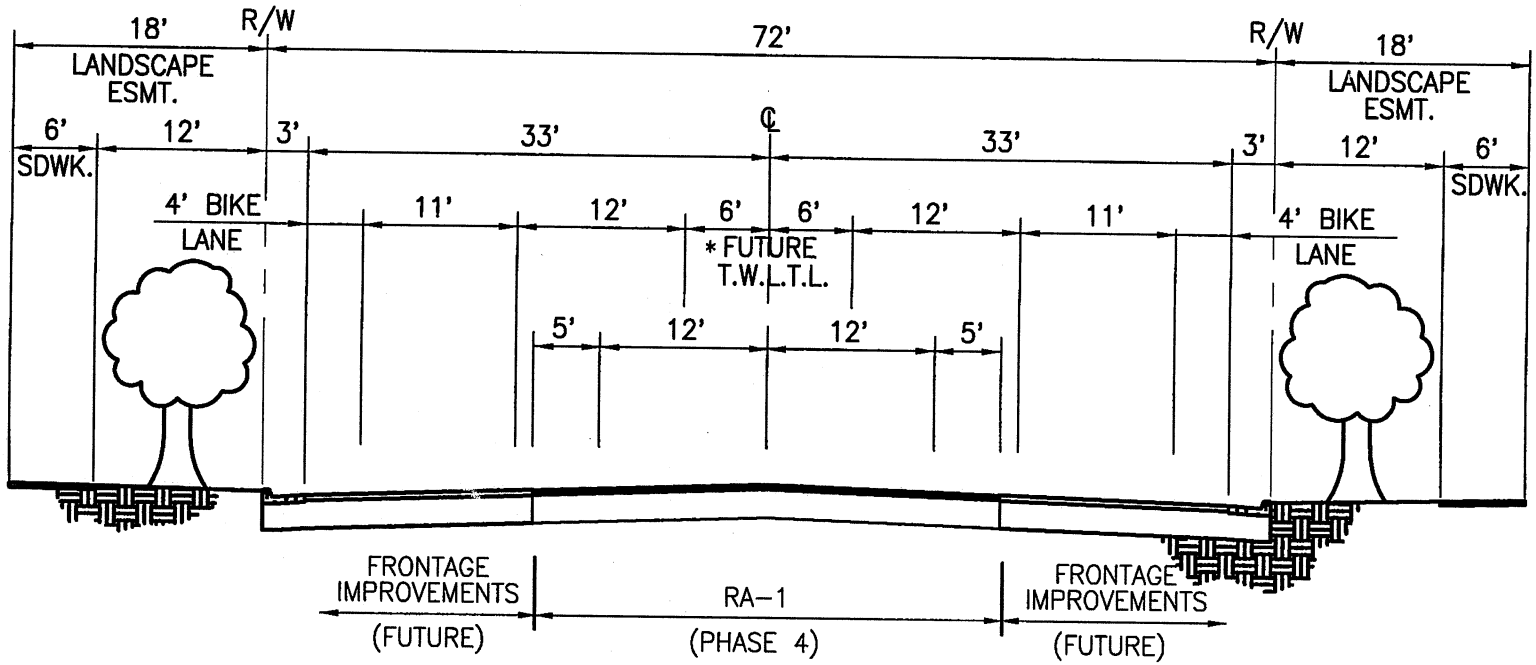

* TWO WAY LEFT TURN LANE

PERSONNEL	
Drafted by:	V. FALLIS
Designed by:	D. JABBOUR
Checked by:	D. JOHNSON
Scale:	N.T.S.

ROAD 'A'

(METRO PARKWAY TO LONE TREE ROAD)

Stantec

Stantec Consulting Inc.
2590 Venture Oaks Way
Sacramento, CA 95833-3288
Tel. 916.569-2500
Fax. 916.921.9274
www.stantec.com

PROJECT No.
R A
1

PROJECT NO. PHASE 6 DPR-1
DEL PASO ROAD - Power Line Road to the Sacramento City Limits

Introduction

It is proposed to overlay the existing pavement and widen the road to two-lane arterial standards from Power Line Road to the Sacramento City Limits.

Background

This facility is the only project for this section of Del Paso Road to be constructed as a major roadway component of the Metro Air Park Facilities Financing Plan.

Existing Facilities

Currently, Del Paso Road is constructed between Power Line Road and the Sacramento City Limits with 18-feet of pavement and roadside ditches within an existing right-of-way.

Proposed Facilities

Right-of-Way:	A minimum of 44-feet of right-of-way will be provided.
Overlay:	18-feet of existing pavement
Pavement:	Add 7-feet of pavement to each side to provide one 12-foot lane and a four-foot shoulder in each direction
Striping, Slurry Seal, and Street Signs:	As required
Drainage:	Roadside ditch each side with cross culverts as required and relocate drainage ditch
Utilities:	Relocate overhead power and overhead telephone
Signalization:	Power Line Road intersection at ultimate configuration

Preliminary Estimate of Costs
For
Metro Air Park
Del Paso Road Surface Improvements
Phase 6
DPR-1

May 2006

Item	Description	Quantity	Unit	Unit Price	Total
	(Power Line Road to City Limits, L = 7,400 LF) (2 Lanes, Overlay Width = 18'; AC;AB Width = 14')				
1.	Clearing & Grubbing	103,600	SF	$0.13	$13,468.00
2.	Excavation	4,700	CY	$16.50	$77,550.00
3.	5.5"AC, 6" AB, & 12" Lime Treated	103,600	SF	$4.50	$466,200.00
4.	Roadside Ditch	14,800	LF	$2.20	$32,560.00
5.	AC Overlay	133,200	SF	$2.30	$306,360.00
6.	48" CMP Culvert	40	LF	$82.50	$3,300.00
7.	AC Dike	1,000	LF	$12.10	$12,100.00
8.	Relocate Drainage Ditch	1,000	LF	$7.70	$7,700.00
9.	Telephone Pole Relocation	50	EA	$2,200.00	$110,000.00
10.	Power Pole Relocation	5	EA	$11,500.00	$57,500.00
11.	Cross Culvert With CMP D.I.	600	LF	$110.00	$66,000.00
12.	Striping	7,400	LF	$7.15	$52,910.00
13.	Street Sign	2	EA	$380.00	$760.00
14.	Signalization @ Power Line Road	1	LS	$148,500.00	$148,500.00
	Subtotal DPR-1				$1,354,908.00
	Engineering 25% (Private)				$338,727.00
	Contingencies 15% (Private)				$203,236.20
15.	ROW Acquisition	3.1	AC	$50,000.00	$155,000.00
	Total DPR-1				$2,051,871.20

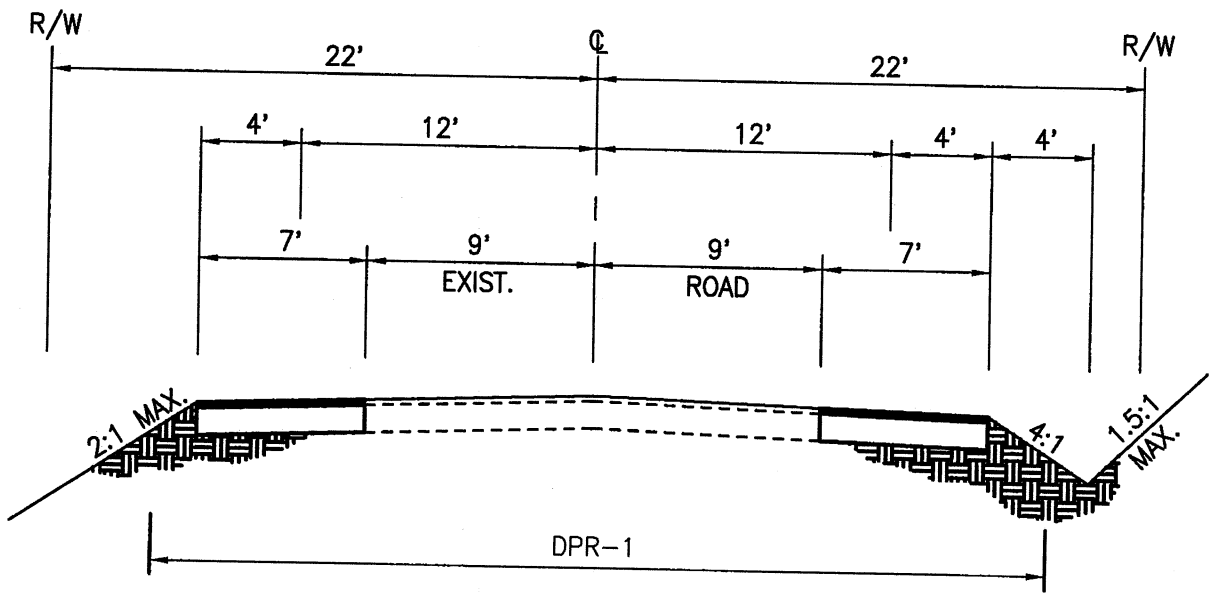

PERSONNEL	
Drafted by:	V. FALLIS
Designed by:	D. JABBOUR
Checked by:	D. JOHNSON
Scale:	N.T.S.

DEL PASO ROAD
(POWER LINE ROAD TO CITY LIMITS)

Stantec
Stantec Consulting Inc.
2590 Venture Oaks Way
Sacramento, CA 95833-3288
Tel. 916.569-2500
Fax. 916.921.9274
www.stantec.com

PROJECT No.
D P R
1

PROJECT PHASE 1C SBR-1
SOUTH BAYOU ROAD - Power Line Road to 2000' East of Metro Parkway

Introduction

It is proposed to construct South Bayou Road from Power Line Road to 2000' east of Metro Parkway to two-lane arterial standards. This project is necessary to upgrade a non-standard section and relocate South Bayou Road around the proposed I-5/Metro Parkway interchange. The section from 2000' east of Metro Parkway to the City Limit is not proposed for improvements since it currently meets two-lane arterial standards.

Background

This facility is the only project for South Bayou Road and is to be constructed as a major roadway component of the Metro Air Park Facilities Financing Plan.

Existing Facilities

Currently, South Bayou Road exists as a frontage road on the south side of I-5. It is constructed to two-lane arterial standards east of the proposed Metro Parkway Interchange.

Proposed Facilities

Right-of-Way:	60-feet
Pavement:	32-feet to provide one 12-foot lane and one four-foot shoulder each direction
Striping and Street Signs:	As required
Drainage:	Roadside Ditch

Preliminary Estimate of Costs
For
Metro Air Park
South Bayou Road Surface Improvements
Phase 1C
SBR-1

May 2006

Item	Description	Quantity	Unit	Unit Price	Total
	(Power Line Road to 2,000' East of Metro Air Parkway, L = 5,600 LF) (2 Lanes, Width = 32')				
1.	Clearing & Grubbing	179,200	SF	$0.13	$23,296.00
2.	Excavation	6,400	CY	$16.50	$105,600.00
3.	5.5"AC, 6" AB, & 12" Lime Treated	179,200	SF	$4.50	$806,400.00
4.	Roadside Ditch	11,200	LF	$2.20	$24,640.00
5.	Striping	5,600	LF	$7.15	$40,040.00
	Subtotal SBR-1				$999,976.00
	Engineering 25% (Public)				$249,994.00
	Contingencies 33% (Public)				$329,992.08
6.	ROW Acquisition	7	AC	$50,000.00	$350,000.00
	Total SBR-1				$1,929,962.08
				Phase 1ABB	$201,308.00
				Phase 1ABC	$48,686.00
				Phase 1C	$1,881,276.08

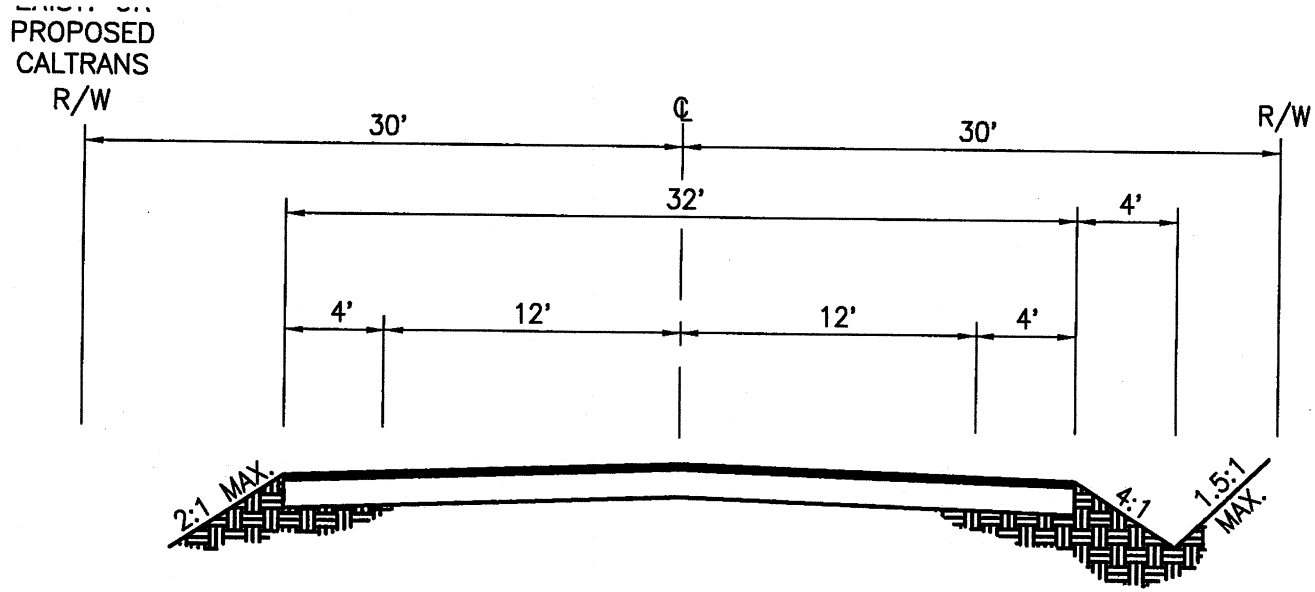

PERSONNEL	
Drafted by:	V. FALLIS
Designed by:	D. JABBOUR
Checked by:	D. JOHNSON
Scale:	N.T.S.

SOUTH BAYOU

(POWER LINE ROAD TO
2000' EAST OF METRO PARKWAY)

Stantec

Stantec Consulting Inc.
2590 Venture Oaks Way
Sacramento, CA 95833-3288
Tel. 916.569-2500
Fax. 916.921.9274
www.stantec.com

PROJECT No.
S B R
1

PROJECT NO. PHASE 6 SBR-2
SOUTH BAYOU ROAD – AIRPORT BLVD INTERSECTION

Introduction

It is proposed to revise the traffic control at the South Bayou Road/Airport Boulevard intersection to southbound stop control only.

Background

This facility is the only project for this intersection to be constructed as a major roadway component of the Metro Air Park Facilities Financing Plan.

Existing Facilities

Currently, Airport Boulevard intersects South Bayou Road as a 'T' intersection with 3-way stop control. Airport Boulevard is a four-lane facility with a median terminating at South Bayou Road with a stop sign and red flashing light. South Bayou Road is a two-lane facility providing through access to the east only and a dead end stub to the west for private access only with stop signs each direction.

Proposed Facilities

Pavement:	Slurry seal intersection after striping removal.
Signs:	Remove existing stop signs on South Bayou Road Stop sign and flashing light to remain on Airport Boulevard.
Striping:	Remove existing stop control striping on South Bayou Road. Re-stripe stop control striping on Airport Boulevard.

PROJECT NO. PHASE 1A/1C I-5-1

I-5/METRO PARKWAY INTERCHANGE - STAGE ONE

Introduction

It is proposed to construct the first phase of a five-lane partial clover (Par-Clo) Type L-9 interchange for Metro Parkway (MP) at I-5.

Background

This facility is the first project for the MP/I-5 interchange and will be constructed as a component of the Metro Air Park Facilities Financing Plan.

Existing Facilities

Currently, I-5 is constructed as a four-lane freeway with 216-feet of right-of-way. Frontage roads (North Bayou Road and South Bayou Road) exist on each side of the freeway. Three barns, two homes and various outbuildings exist within the influence of the proposed interchange right-of-way. Pacific Bell and SMUD easements and facilities also exist on each side of the freeway. A minor drainage ditch exists on the south side of the freeway.

Proposed Facilities

Embankment:	Ultimate interchange configuration.
Metro Parkway:	Three-lane facility with two 3.6 m southbound lanes, one 3.6 m northbound lane, an 4.3 m median tapering to a 0.6 m paved median at the overcrossing, 1.5 m bike lane on each side, curb and gutter on each side and a 1.5 m sidewalk on the west side. MP south of I-5 shall terminate with a cul-de-sac within Caltrans right-of-way.
Overcrossing:	Three-lane facility striped with three 3.6 m lanes, 0.6 m median, 1.5 m bike lanes, and a 1.5 m sidewalk on the west side.
Exit Ramps:	Northbound one-lane diagonal exit ramp. Southbound one-lane diagonal exit ramp.
Diagonal Entrance Ramp:	Northbound one-lane entrance ramp.
Loop Entrance Ramp:	Southbound two-lane loop entrance ramp with ramp metering.
Auxiliary Lanes:	Southbound Loop from southbound lane to SR-99 north and northbound lane from SR-99 south to Metro Parkway.
Streetlighting:	As required
Striping and Streetsigns:	As required

Drainage:	Relocate existing drainage ditch on south side of freeway and construct drainage within the interchange as required
Utilities:	Relocate all utilities as required
Frontage Road:	Abandon North Bayou Road. Reconstruct South Bayou Road (SBR) were appropriate to two-lane arterial standards. See also the Roadway Facilities for the project description and cost estimate for the SBR-1. South Bayou Road shall not be connected to MP as a part of this project.

Preliminary Estimate of Costs
For
Metro Air Park
Concept Approval Report
I-5/Metro Air Parkway Interchange
Stage One
Phase 1C
I5-1

January 2006

Item	Description	Quantity	Unit	Unit Price	Total
1.	Clearing & Grubbing	1	LS	$ 38,500.00	$ 38,500.00
2.	Imported Borrow	229,295	m^3	$ 6.00	$ 1,375,770.00
3.	Roadway Excavation	29,303	m^3	$ 18.00	$ 527,454.00
4.	Asphalt Concrete	23,429	Tonne	$ 70.00	$ 1,640,030.00
5.	Aggregate Base (CL 2)	60,565	Tonne	$ 33.00	$ 1,998,645.00
6.	Aggregate Subbase	38,295	Tonne	$ 27.50	$ 1,053,112.50
7.	Minor Concrete (Curb & Gutter)	161	m^3	$ 365.00	$ 58,765.00
8.	Minor Concrete (Sidewalk)	78.8	m^3	$ 396.00	$ 31,204.80
9.	Plastic Pipe (Edge Drain)	2,745	m	$ 38.50	$ 105,682.50
10.	Drainage	1	JOB	$ 355,000.00	$ 355,000.00
11.	Channel Relocation	1,035	m	$ 110.00	$ 113,850.00
12.	Metal Beam Guard Railing	90	m	$ 102.30	$ 9,207.00
13.	406mm Ductile Iron Pipe (Watermain)	1,506	m	$ 260.00	$ 391,560.00
14.	Water Pollution Control	1	LS	$ 220,000.00	$ 220,000.00
15.	Relocate Fiber Optic Cable	1	JOB	$ 440,000.00	$ 440,000.00
16.	Relocate Joint Pole	10	EA	$ 2,420.00	$ 24,200.00
17.	Right of Way Acquisition (structures)	1	JOB	$ 264,000.00	$ 264,000.00
18.	Relocate Call Box	6	EA	$ 6,050.00	$ 36,300.00
19.	Constrution Area Signs	1	LS	$ 16,500.00	$ 16,500.00
20.	Traffic Control System	1	LS	$ 165,000.00	$ 165,000.00
21.	Pavement Striping	1	JOB	$ 41,500.00	$ 41,500.00
22.	Signing	1	JOB	$ 215,000.00	$ 215,000.00
23.	Ramp meter System	1	LS	$ 92,400.00	$ 92,400.00
24.	Street Lighting	27	EA	$ 4,235.00	$ 114,345.00
25.	Minor Items	1	LS	$ 466,401.00	$ 466,401.00
26.	Suplemental Work	1	LS	$ 979,443.00	$ 979,443.00
27.	Concrete Bridge (19.64m x 105.60m)	2,137	m^2	$ 1,700.00	$ 3,632,900.00
28.	Structure Mobilization	1	LS	$ 363,290.00	$ 363,290.00
29.	Traffic System Management	1	LS	$ 165,000.00	$ 165,000.00

Subtotal I5-1	$14,935,059.80
Construction Engineering 10% (Public)	$1,493,505.98
Engineering Phase 1A	$3,100,000.00
Engineering Phase 1C	$600,000.00
Contingencies 15% (Public)	$2,240,259.00
Total I5-1	$22,368,825.00
Total Phase 1AA	$2,100,000.00
Total Phase 1AB	$1,000,000.00
Total Phase 1C	$19,268,825.00

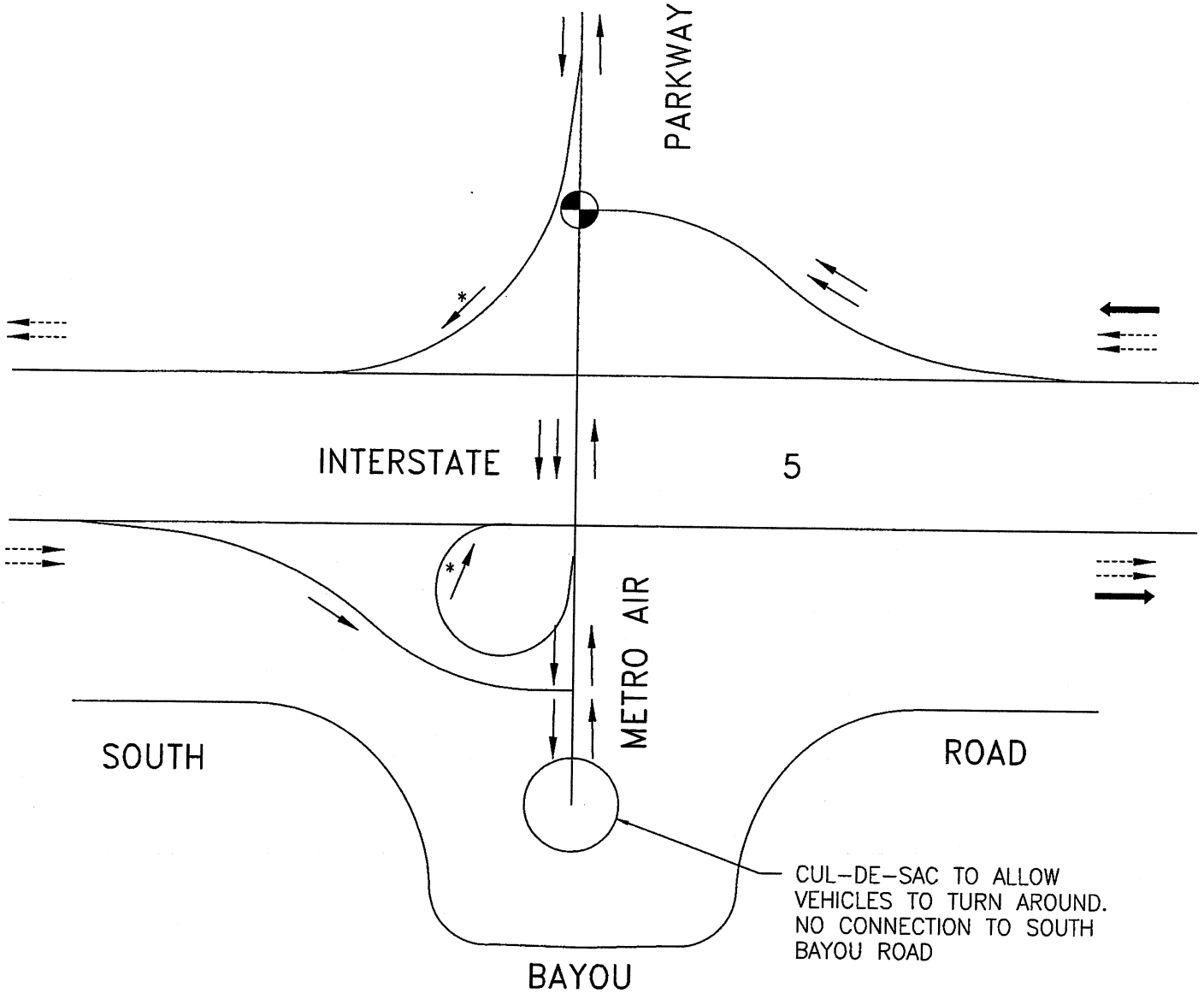

* = INCLUDES ONE LANE FOR HOV BYPASS

= EXISTING LANE

= PROPOSED LANE

= PROPOSED AUXILIARY LANE

= EXISTING AUXILIARY LANE

= PROPOSED TRAFFIC SIGNAL

= EXISTING TRAFFIC SIGNAL

Stantec Consulting Inc.
2590 Venture Oaks Way
Sacramento, CA 95833-3288
Tel. 916.569.2500
Fax. 916.921.9274
www.stantec.com

METRO AIR PARK
INTERSTATE 5
METRO PARKWAY
STAGE ONE

PROJECT 15-1

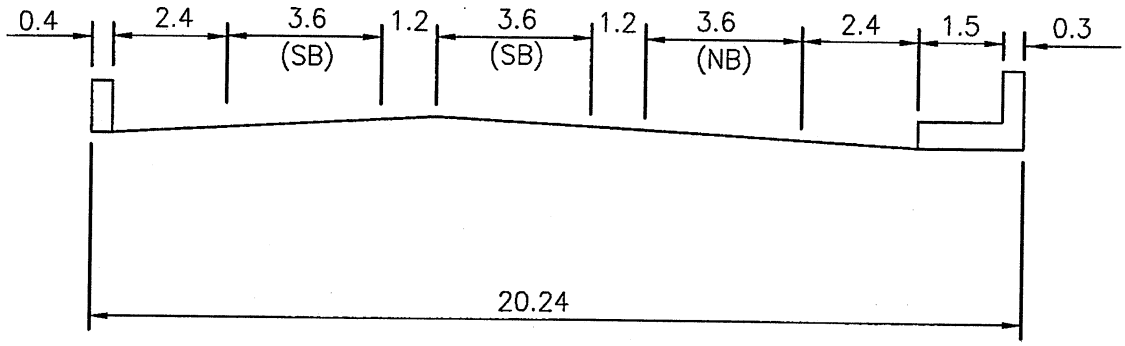

PHASE 1 SECTION
(PHASE A 15–1)

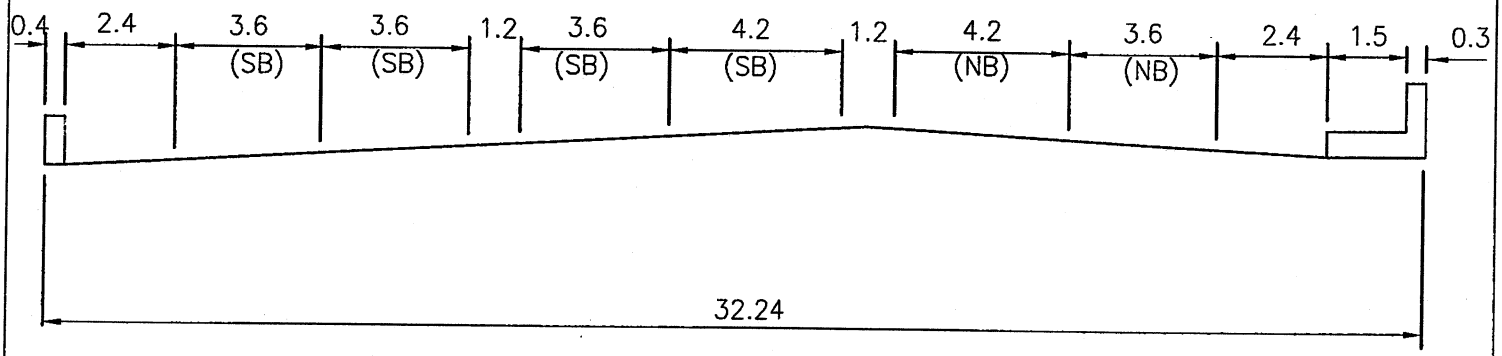

ULTIMATE SECTION
(PHASE 6 15–4)

(SB) – SOUTHBOUND
(NB) – NORTHBOUND

Stantec Consulting Inc.
2590 Venture Oaks Way
Sacramento, CA 95833-3288
Tel. 916.569.2500
Fax. 916.921.9274
www.stantec.com

METRO PARKWAY
OVERCROSSING PHASING

PROJECT No.
15–1
15–4

PROJECT NO. PHASE 4 I-5-2
I-5/METRO PARKWAY INTERCHANGE - STAGE TWO

Introduction

It is proposed to construct the second phase of a five-lane Par-Clo Type L-9 interchange for Metro Parkway (MP) at I-5.

Background

This facility is the second project for the MP/I-5 interchange and will be funded as a component of the Metro Air Park Facilities Financing Plan.

Existing Facilities

Currently, I-5 is constructed as a four-lane freeway with 216-feet of right-of-way. Frontage roads (North Bayou Road and South Bayou Road) exist on each side of the freeway. Three barns, two homes and various outbuildings exist within the influence of the proposed interchange right-of-way. Pacific Bell and SMUD easements and facilities also exist on each side of the freeway. A minor drainage ditch exists on the south side of the freeway. Project I5-1 will exist at time of construction.

Proposed Facilities

Exit Ramp:	Widen the northbound exit ramp to two lanes with a free right to MP and a single left turn lane.
Striping and Streetsigns:	As required.
Signalization:	Northbound exit ramps.
Landscaping:	Provide landscaping along the project frontage of I-5 from Lone Tree Road to Power Line Road and within the MP interchange to the requirements of Caltrans and the Landscape and Design Guidelines.

Preliminary Estimate of Costs
For
Metro Air Park
Concept Approval Report
I-5/Metro Air Parkway Interchange
Stage Two
Phase 4
I5-2

January 2006

Item	Description	Quantity	Unit	Unit Price	Total
1	Clearing & Grubbing	1	LS	$7,500.00	$7,500.00
2	Roadway Excavation	907	m^3	$18.00	$16,326.00
3	Asphalt Concrete	432	Tonne	$70.00	$30,240.00
4	Aggregate Base (CL 2)	640	Tonne	$33.00	$21,120.00
5	Aggregate Subbase	1,066	Tonne	$27.50	$29,315.00
6	Water Pollution Control	1	LS	$15,000.00	$15,000.00
7	Landscaping	33,900	m^2	$26.07	$883,773.00
8	Traffic Control System	1	LS	$25,000.00	$25,000.00
9	Pavement Striping	1	JOB	$5,500.00	$5,500.00
10	Signing	1	JOB	$55,000.00	$55,000.00
11	Traffic Signals/Lighting	1	EA	$165,000.00	$165,000.00
12	Minor Items	1	LS	$62,689.00	$62,689.00
13	Supplemental Work	1	LS	$131,646.00	$131,646.00
	Subtotal I5-2				$1,448,109.00
	Engineering 25% (Public)				$362,027.00
	Contingencies 15% (Public)				$217,216.00
	Total I5-2				$2,027,352.00

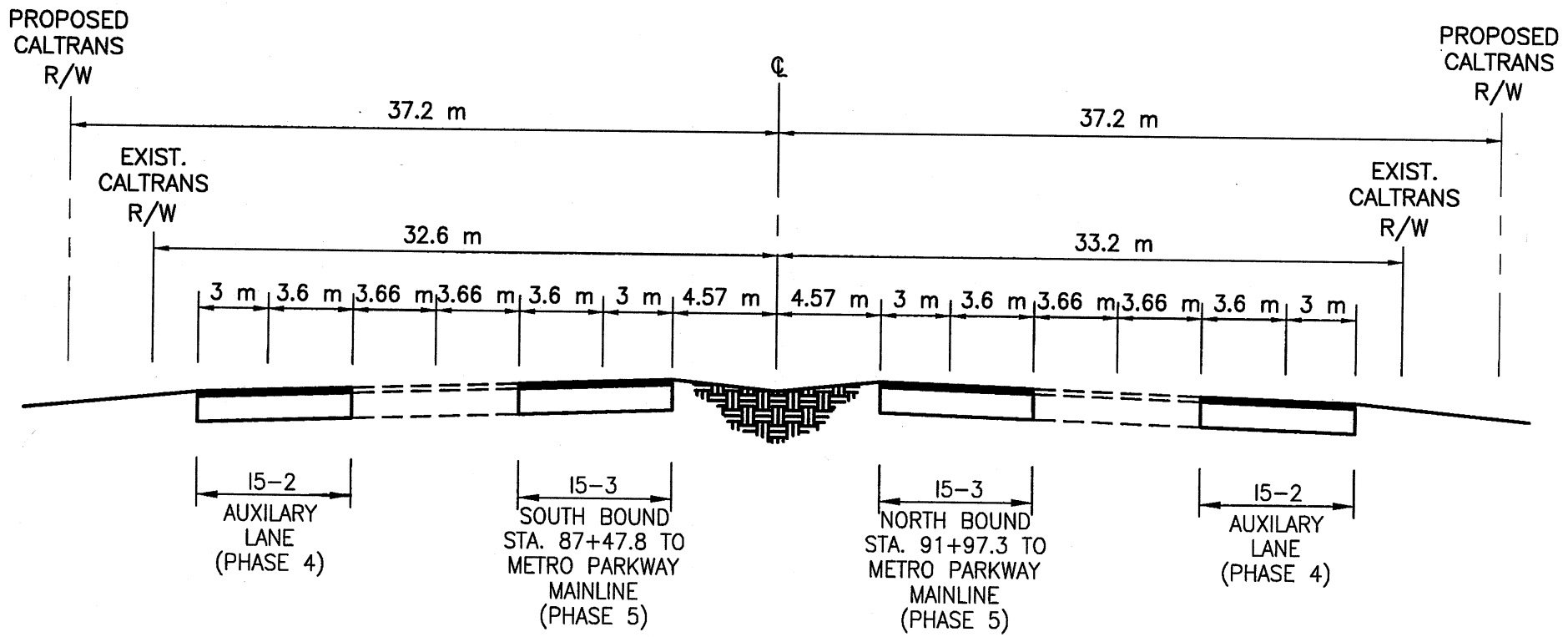

PERSONNEL	
Drafted by:	V. FALLIS
Designed by:	D. JABBOUR
Checked by:	D. JOHNSON
Scale:	N.T.S.

INTERSTATE 5

Stantec
Stantec Consulting Inc.
2590 Venture Oaks Way
Sacramento, CA 95833-3288
Tel. 916.569-2500
Fax. 916.921.9274
www.stantec.com

PROJECT No.
I 5
2 & 3

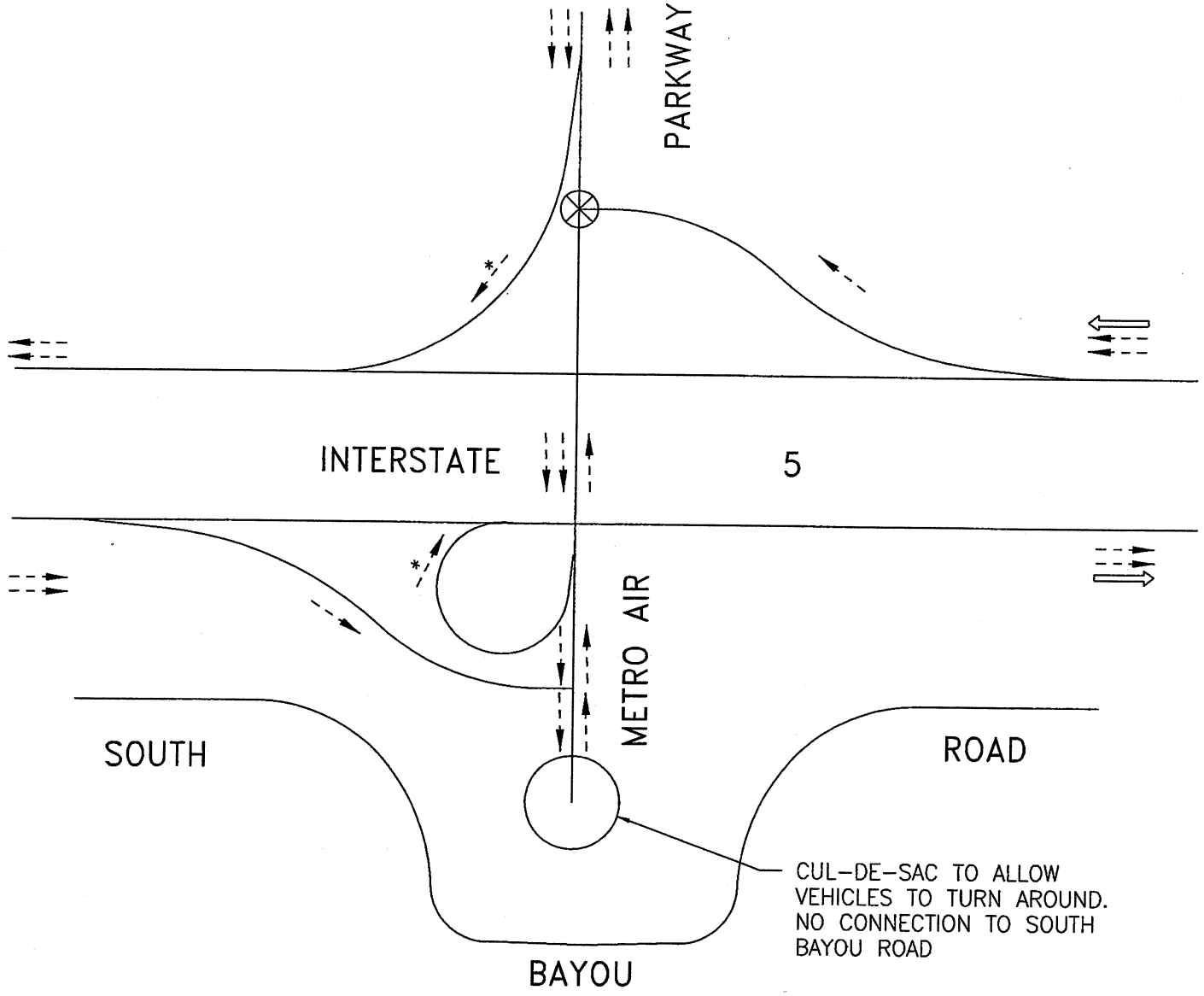

* = INCLUDES ONE LANE FOR HOV BYPASS

= EXISTING LANE

= PROPOSED LANE

= PROPOSED AUXILIARY LANE

= EXISTING AUXILIARY LANE

= PROPOSED TRAFFIC SIGNAL

= EXISTING TRAFFIC SIGNAL

Stantec Consulting Inc.
2590 Venture Oaks Way
Sacramento, CA 95833-3288
Tel. 916.569.2500
Fax. 916.921.9274
www.stantec.com

METRO AIR PARK
INTERSTATE 5
METRO PARKWAY
STAGE TWO

PROJECT 15-2

PROJECT NO. PHASE 5 I-5-3
I-5 MAIN LINE LANES

Introduction

It is proposed to construct one additional main line lane in each direction on I-5 from the I-5/SR-99 interchange to the I-5/Metro Parkway interchange within the existing median.

Background

This facility will be constructed as a component of the Metro Air Park Facilities Financing Plan.

Existing Facilities

Currently, I-5 is constructed as a six-lane freeway south of the I-5/SR-99 interchange and as a four-lane freeway north of the I-5/SR-99 interchange within a minimum 204-foot right-of-way. Typical half section includes a 37-foot median, five-foot median shoulder, two 12-foot lanes and a 10-foot shoulder. Cross culverts provide median drainage with risers and span the entire right-of-way.

Proposed Facilities

Pavement:	Add one 3.6 m lane and one 3.0 m median shoulder each direction from the I-5/SR-99 interchange to the I-5/Metro Parkway interchange
Median:	Regrade median as required
Drainage:	Adjust existing median risers to regraded median.

Preliminary Estimate of Costs
For
Metro Air Park
Concept Approval Report
I-5 Main Line Lanes
Phase 5
I5-3

January 2006

Item	Description	Quantity	Unit	Unit Price	Total
	(Northbound - Sta 91+97.3 to Sta 123+00) (Southbound - Sta 87+47.8 to Sta 115+00) (1- 3.6m Lane & 3.0m Shoulder Each Direction, Total Width = 6.6 m)				
1.	Clearing & Grubbing	1	JOB	$10,000.00	$10,000.00
2.	Roadway Excavation	39,610	m^3	$18.00	$712,980.00
3.	Asphalt Concrete	18,576	Tonne	$70.00	$1,300,320.00
4.	Aggregate Base (CL 2)	26,440	Tonne	$33.00	$872,520.00
5.	Aggregate Subbase	45,078	Tonne	$27.50	$1,239,645.00
6.	Asphalt Concrete (Open Graded)	1,307	Tonne	$67.10	$87,699.70
7.	Drainage	1	JOB	$71,500.00	$71,500.00
8.	Water Pollution Control	1	LS	$27,500.00	$27,500.00
9.	Traffic Control System	1	LS	$110,000.00	$110,000.00
10.	Pavement Striping	1	JOB	$33,000.00	$33,000.00
11.	Signing	1	JOB	$16,500.00	$16,500.00
12.	Minor Items	1	LS	$224,083.00	$224,083.00
13.	Suplemental Work	1	LS	$470,575.00	$470,575.00
	Subtotal I5-3				$5,176,322.70
	Engineering 25% (Public)				$1,294,081.00
	Contingencies 15% (Public)				$776,448.00
	Total I5-3				$7,246,851.70

PROJECT NO. PHASE 6 I-5-4
I-5/METRO PARKWAY INTERCHANGE - FINAL STAGE

Introduction

It is proposed to construct the final phase of a five-lane Par-Clo Type L-9 interchange for Metro Parkway (MP) at I-5.

Background

This facility is the final project for the MP/I-5 interchange and will be constructed as a component of the Metro Air Park Facilities Financing Plan.

Existing Facilities

Currently, I-5 is constructed as a four-lane freeway with 216-feet of right-of-way. Frontage roads (North Bayou Road and South Bayou Road) exist on each side of the freeway. Three barns, two homes and various outbuildings exist within the influence of the proposed interchange right-of-way. Pacific Bell and SMUD easements and facilities also exist on each side of the freeway. A minor drainage ditch exists on the south side of the freeway. Project I5-1 and I5-2 will exist at time of construction.

Proposed Facilities

Metro Parkway:	Widen I5-1 improvements to provide a five lane facility with three 3.6 m southbound lanes, two 3.6 m northbound lanes south of the northbound diagonal ramp free right and three 3.6 m northbound lanes north of the northbound diagonal ramp free right, a 4.3 m landscape median tapering to a 1.2 m paved median at the overcrossing, 1.5 m bike lane on each side, curb and gutter on each side and a 1.5 m sidewalk on the west side. Connect MP to South Bayou Road as a part of this project.
Overcrossing Widening:	Widen I5-1 improvements to provide a five-lane facility with three 3.6 m southbound lanes, two 3.6 m northbound lanes, 1.2 m median, 1.5 m bike lane each side and a 1.5 m sidewalk on the west side.
Exit Ramp:	Add dual left and single right turn lanes for SOUTHBOUND exit ramp.
Loop Entrance Ramp:	Construct the northbound MP to NORTHBOUND I-5 loop entrance ramp with ramp metering and an HOV bypass lane.
Diagonal Entrance Ramps:	Construct the northbound MP to SOUTHBOUND I-5 diagonal entrance ramp with ramp metering and an HOV bypass lane. Add ramp metering to the southbound MP to northbound I-5 entrance ramp.
Aux Lane	Southbound Auxiliary Lane between Airport Southbound on-ramp and Metro Parkway Southbound diagonal on-ramp

Striping and Streetsigns:	As required.
Signalization:	Southbound exit ramps.
Landscaping:	Re-landscape existing landscaping damaged by construction.

Preliminary Estimate of Costs
For
Metro Air Park
Concept Approval Report
I-5/Metro Air Parkway Interchange
Final Stage
Phase 6
I5-4

January 2006

Item	Description	Quantity	Unit	Unit Price	Total
1.	Clearing & Grubbing	1	JOB	$25,000.00	$25,000.00
2.	Roadway Excavation	31,800	m^3	$18.00	$572,400.00
3.	Asphalt Concrete	14,091	Tonne	$70.00	$986,370.00
4.	Aggregate Base (CL 2)	27,225	Tonne	$33.00	$898,425.00
5.	Aggregate Subbase	17,821	Tonne	$27.50	$490,077.50
6.	Minor Concrete (Curb & Gutter)	360	m^3	$365.00	$131,400.00
7.	Plastic Pipe (Edge Drain)	490	m	$38.50	$18,865.00
8.	Drainage	1	JOB	$33,000.00	$33,000.00
9.	Water Pollution Control	1	LS	$275,000.00	$275,000.00
10.	Landscaping	6,500	m^2	$26.07	$169,455.00
11.	Construction Area Signs	1	LS	$11,000.00	$11,000.00
12.	Traffic Control System	1	LS	$220,000.00	$220,000.00
13.	Pavement Striping	1	JOB	$5,500.00	$5,500.00
14.	Signing	1	JOB	$82,500.00	$82,500.00
15.	Ramp Meter System	3	EA	$92,400.00	$277,200.00
16.	Traffic Signals	1	EA	$165,000.00	$165,000.00
17.	Signalization Interconnect	1	LS	$52,800.00	$52,800.00
18.	Minor Items	1	LS	$220,700.00	$220,700.00
19.	Suplemental Work	1	LS	$463,469.00	$463,469.00
20.	Powerline Road Abutment Retaining W:	1	LS	$180,000.00	$180,000.00
21.	Concrete Bridge (7.2m x 80m)	576	m^2	$1,870.00	$1,077,120.00
22.	Structure Mobilization	1	LS	$107,712.00	$107,712.00
	Subtotal I5-4				$6,462,993.50
	Engineering 25% (Public)				$1,615,748.00
	Contingencies 15% (Public)				$969,449.00
	Total I5-4				$9,048,190.50

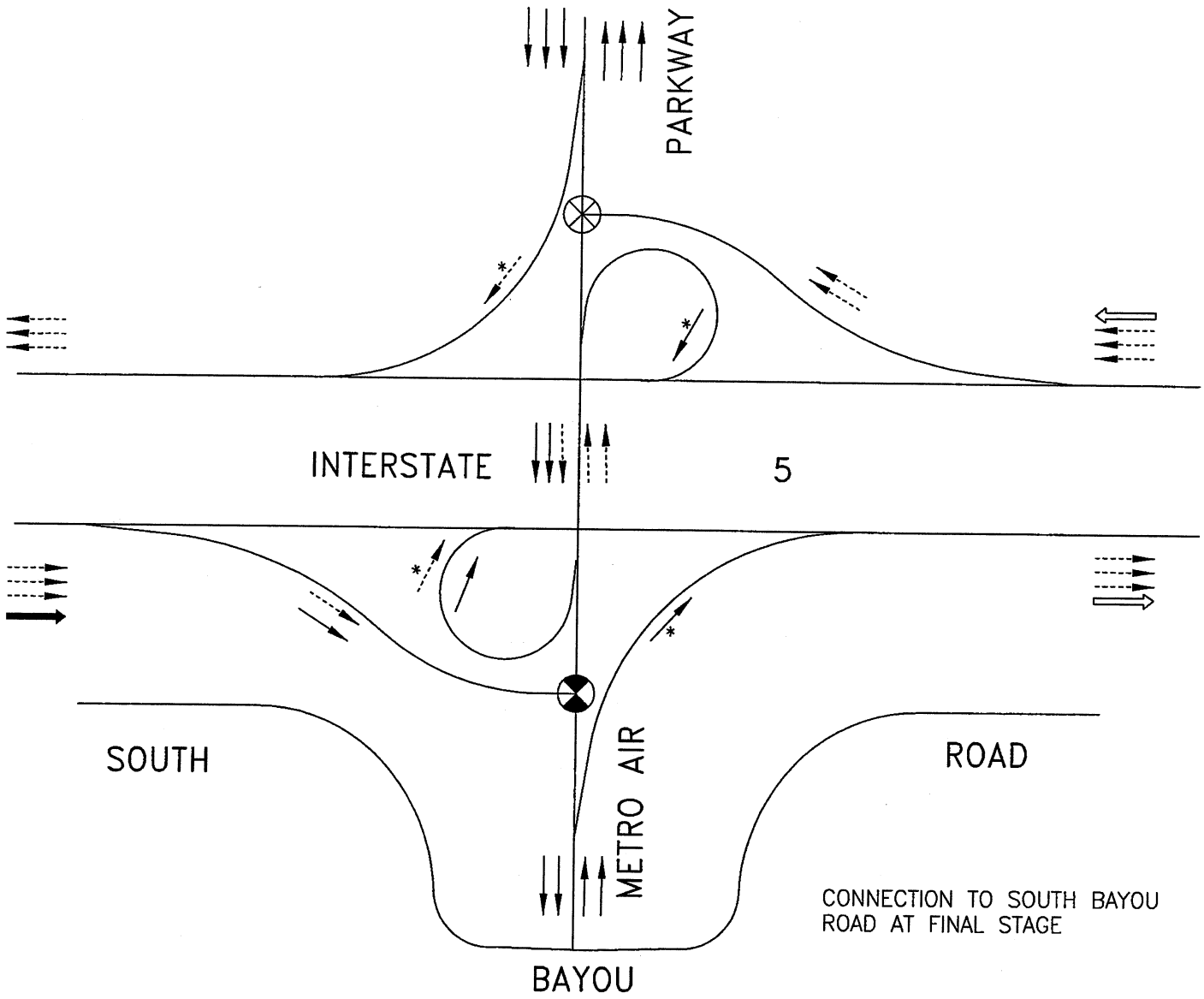

* = INCLUDES ONE LANE FOR HOV BYPASS

= EXISTING LANE

= PROPOSED LANE

= PROPOSED AUXILIARY LANE

= EXISTING AUXILIARY LANE

= PROPOSED TRAFFIC SIGNAL

= EXISTING TRAFFIC SIGNAL

Stantec Consulting Inc.
2590 Venture Oaks Way
Sacramento, CA 95833–3288
Tel. 916.569.2500
Fax. 916.921.9274
www.stantec.com

METRO AIR PARK
INTERSTATE 5
METRO PARKWAY
FINAL STAGE

PROJECT 15–4

PROJECT NO. PHASE 6 I5-5
I-5/AIRPORT BOULEVARD SOUTHBOUND EXIT RAMP

Introduction

It is proposed to widen the existing exit ramp to two-lanes and install signalization at the termination on Airport Boulevard.

Background

This facility will be funded as a 29% fair share component of the Metro Air Park Facilities Financing Plan.

Existing Facilities

Currently, the existing southbound ramp is constructed as a single-lane ramp with a two-foot left shoulder, a 12-foot lane and an eight-foot shoulder with AC dike.

Proposed Facility

Pavement:	Add 6.5 m of pavement to provide a 1.2 m left shoulder, two 3.6 m lanes and a 2.4 m shoulder for the last 180 m of the ramp.
Striping and Streetsigns:	As required
Signalization:	At ramp terminus

PROJECT NO. PHASE 1AA/1AB I5-6
I-5/METRO PARKWAY INTERCHANGE - STAGE ONE

Introduction

It is proposed to acquire right-of-way property for the construction of the ultimate right-of-way of Metro Parkway (MP) at I-5.

Background

The acquisition of the right-of-way property for the MP/I-5 interchange is a component of the Metro Air Park Facilities Financing Plan.

Existing Facilities

Currently, I-5 is constructed as a four-lane freeway with 216 feet of right-of-way . Frontage Roads (North Bayou Road and South Bayou Road) exist on each side of the freeway. Three barns, two homes and various outbuildings exist within the influence of the proposed interchange right-of-way. Pacific Bell and SMUD easements and facilities also exist on each side of the freeway. A minor drainage ditch exists on the south side of the freeway.

Proposed Facilities

Right-of-Way	Acquire 4.6 hectares of right-of-way property along the north side of I-5.

PROJECT NO. PHASE 1B I5-7
I-5/METRO PARKWAY INTERCHANGE - STAGE ONE

Introduction

It is proposed to acquire right-of-way property for the ultimate right-of-way of Metro Parkway (MP) at I-5.

Background

The acquisition of the right-of-way property for the MP/I-5 interchange is a component of the Metro Air Park Facilities Financing Plan.

Existing Facilities

Currently, I-5 is constructed as a four-lane freeway with 216 feet of right-of-way . Frontage Roads (North Bayou Road and South Bayou Road) exist on each side of the freeway. Three barns, two homes and various outbuildings exist within the influence of the proposed interchange right-of-way. Pacific Bell and SMUD easements and facilities also exist on each side of the freeway. A minor drainage ditch exists on the south side of the freeway.

Proposed Facilities

Right-of-Way	Acquire 11.6 hectares of right-of-way property along the south side of I-5.

Preliminary Estimate of Costs
For
Metro Air Park
Concept Approval Report
I-5/Metro Air Parkway Interchange
Stage One
Phase 1B
I5-7

January 2006

Item	Description	Quantity	Unit	Unit Price	Total
1.	ROW Acquisition (Ag)	11.6	ha	$62,000.00	$719,200.00
	Subtotal I5-7				$719,200.00
	Total I5-7				$719,200.00

PROJECT NO. PHASE 1AB I5-8
T-MOBILE CELL TOWER RELOCATION

Introduction

It is proposed to relocate the existing T-Mobile cell tower facilities to the adjacent Cingular tower site.

Existing Facilities

Both the T-Mobile cell tower facilities and the Cingular tower and site exist.

Proposed Facilities

The existing T-Mobile site will be relocated so it does not conflict with the Metro Parkway and I5 Interchange. The T-Mobile facilities will be relocated to the exiting Cingular cell tower and site, which do not conflict with the future interchange.

Preliminary Estimate of Costs
For
Metro Air Park
T-Mobile Cell Tower Relocation
Phase 1AB
I5-8

January 2006

Item	Description	Quantity	Unit	Unit Price	Total
1.	T-Mobile Cell Tower Relocation	1	Job	$323,600.00	$323,600.00
	Subtotal I5-8				$323,600.00
	Total I5-8				$323,600.00
				Phase 1ABA	$144,983.00
				Phase 1ABB	$178,617.00

PROJECT NO. PHASE 1AA/1AB SR99-1.1
SR-99/ELVERTA ROAD INTERSECTION WIDENING

Introduction

It is proposed to construct intersection widening for the SR-99/Elverta Road intersection.

Background

This facility is the only project for this intersection and will be constructed as a component of the Metro Air Park Facilities Financing Plan.

Existing Facilities

SR-99 is constructed as a four-lane freeway with a 46-foot median and 10-foot shoulders. Elverta Road is constructed as a two-lane arterial. The SR-99 exit/entrance ramps are as follows: northbound and southbound single-lane diagonal exit ramps and northbound and southbound single-lane diagonal entrance ramps. All existing channels and utilities have been relocated outside of the interchange right-of-way which is sufficient to construct the proposed facility.

Proposed Facilities

Intersection Widening:	Add one through lane in the north and southbound direction on SR-99 and add left and right hand turning lanes in both the eastbound and westbound directions of Elverta Road. Reconstruct the signals to match the revised lane configurations.
Striping	As Required

Preliminary Estimate of Costs
For
Metro Air Park
Project Study Report
SR99/Elverta Road Intersection Widening
Phase 1AA / Phase 1AB
SR99-1.1

January 2006

Item	Description	Quantity	Unit	Unit Price	Total
1	Clearing & Grubbing	1	EA	$10,000.00	$10,000.00
2	Roadway Excavation	5,672	m^3	$18.00	$102,096.00
3	Asphalt Concrete (Type A)	2,574	Tonne	$70.00	$180,180.00
4	Aggregate Base (CL 2)	6,045	Tonne	$33.00	$199,485.00
5	Aggregate Subbase	4,133	Tonne	$27.50	$113,657.50
6	Drainage	1	LS	$10,000.00	$10,000.00
7	Water Pollution Control	1	LS	$30,000.00	$30,000.00
8	Traffic Control	1	LS	$100,000.00	$100,000.00
9	Striping	1	JOB	$15,000.00	$15,000.00
10	Signage	1	JOB	$15,000.00	$15,000.00
11	Modify Traffic Signals	1	JOB	$150,000.00	$150,000.00
12	Pavement Sawcut	1,328	m	$6.55	$8,698.40
13	Slurry Seal	33,907	m^2	$2.15	$72,900.05
14	Pavement Markings @ Intersection	1	JOB	$10,000.00	$10,000.00
15	Mobilization	1	JOB	$100,000.00	$100,000.00
	Subtotal SR99-1.1				$1,117,016.95
	Engineering 33.9% (Public)				$378,720.00
	Contingencies 25% (Public)				$279,254.24
	Construction Management 3% (Public)				$33,510.51
	Total SR99-1.1				$1,808,501.70
	Funded with Series 2004 A Bond Proceeds				$378,720.00
	Funnded with Series B Bond Proceeds				$1,429,781.70

PROJECT NO. PHASE 1AA/1AB SR99-1.2
SR-99/ELKHORN BOULEVARD SIGNALIZATION

Introduction

It is proposed to install traffic signalization at the northbound and southbound exit ramp terminus.

Background

This facility will be constructed as a component of the Metro Air Park Facilities Financing Plan.

Existing Facilities

Currently, the SR-99/Elkhorn Boulevard interchange is constructed as a two-lane Par-Clo Type L-9 interchange. SR-99 is constructed as a four-lane freeway with a 46-foot median and 10-foot shoulders. Elkhorn Boulevard is constructed as a two-lane arterial. The SR-99 exit/entrance ramps are as follows: northbound and southbound single-lane diagonal exit ramps with a two-lane termination at Elkhorn Boulevard; northbound and southbound single-lane loop entrance ramps; northbound and southbound single-lane diagonal entrance ramps. All existing channels and utilities have been relocated outside of the interchange right-of-way which is sufficient to construct the proposed facility.

Proposed Facilities

Signalization: Northbound and Southbound exit ramp terminus

Preliminary Estimate of Costs
For
Metro Air Park
Project Study Report
SR99/Elkhorn Boulevard Signalization
Phase 1AA / Phase 1AB
SR99-1.2

January 2006

Item	Description	Quantity	Unit	Unit Price	Total
1.	Maintaining Traffic	1	LS	$27,500.00	$27,500.00
2.	Pavement Striping	1	JOB	$8,250.00	$8,250.00
3.	Signing	1	JOB	$5,500.00	$5,500.00
4.	Traffic Signals	2	EA	$165,000.00	$330,000.00
5.	Minor Items	1	LS	$22,245.00	$22,245.00
6.	Suplemental Work	1	LS	$43,225.00	$43,225.00
	Subtotal SR99-1.2				$436,720.00
	Engineering 28.9% (Public)				$126,240.00
	Contingencies 15% (Public)				$65,508.00
	Construction Management 3% (Public)				$13,101.60
	Total SR99-1.2				$641,569.60
	Funded with Series 2004 A Bond Proceeds				$126,240.00
	Funnded with Series B Bond Proceeds				$515,329.60

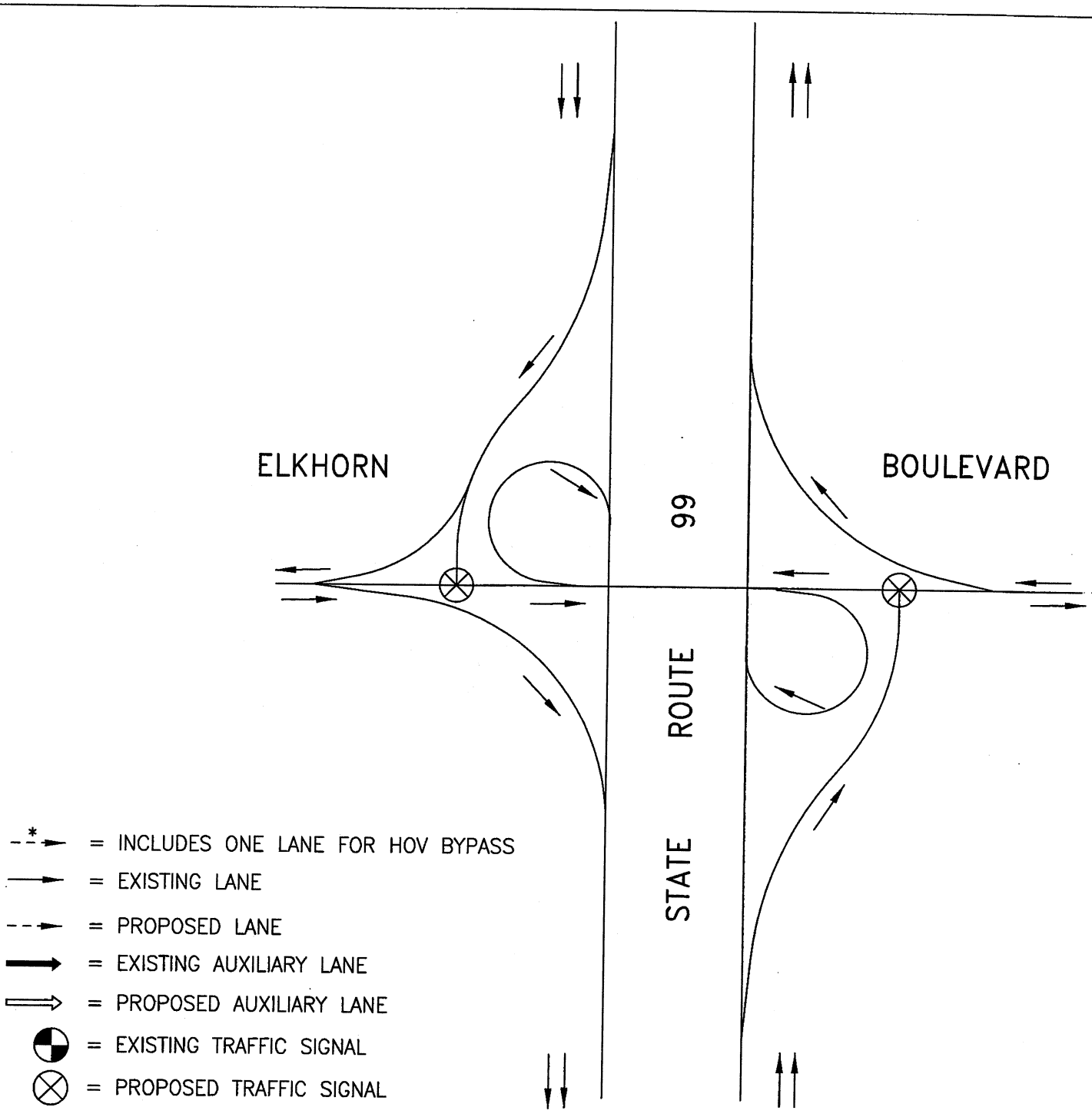

Stantec Consulting Inc.
2590 Venture Oaks Way
Sacramento, CA 95833-3288
Tel. 916.569.2500
Fax. 916.921.9274
www.stantec.com

METRO AIR PARK
STATE ROUTE 99
ELKHORN BOULEVARD
SIGNALIZATION

PROJECT
SR99-1.2

V:\52844\Active\84471010\Exhibits\Volume 2 Exhibits\fig-1.dwg 5/30/03 2:26pm cskinner

PROJECT NO. PHASE 3 SR99-2
SR-99/ELKHORN BOULEVARD INTERCHANGE WIDENING - STAGE ONE

Introduction

It is proposed to construct the first phase widening of the existing two-lane interchange to a six-lane Par-Clo Type L-9 interchange.

Background

This facility is the first project for widening the EB/SR-99 interchange and will be funded as a 44% fair share component of the Metro Air Park Facilities Financing Plan.

Existing Facilities

Currently, the SR-99/Elkhorn Boulevard interchange is constructed as a two-lane Par-Clo Type L-9 interchange. SR-99 is constructed as a four-lane freeway with a 46-foot median and 10-foot shoulders. Elkhorn Boulevard is constructed as a two-lane arterial with an overcrossing that is 47.75 feet wide with a 12 foot lane and eight foot shoulder each direction and a five foot sidewalk on the north side. The SR-99 exit/entrance ramps are as follows: northbound and southbound single-lane diagonal exit ramps with a two-lane termination at Elkhorn Boulevard; northbound and southbound single-lane loop entrance ramps; northbound and southbound single-lane diagonal entrance ramps. All existing channels and utilities have been relocated outside of the interchange right-of-way which is sufficient to construct the proposed facility. Project SR99-1 will exist at time of construction.

Proposed Facilities

Right-of-Way:	Acquire additional 0.5ha right of way.
Embankment:	For ultimate interchange configuration.
Elkhorn Boulevard:	Widen the existing two-lane facility to a four-lane facility with two 3.6 m west bound lanes, two 3.6 m east bound lanes, an 11.5 m median tapering to an 8.4 m paved median at the overcrossing, 1.5 m bike lanes on each side and a 1.5 m sidewalk on the north side only.
Overcrossing Widening:	Widen the existing two-lane overcrossing on the south side to a six-lane overcrossing striped for two 3.6 m west bound lanes, two 3.5 m east bound lanes, an 8.4 m median, 1.5 m bike lanes on each side and a 1.5 m sidewalk on the north side only. The span shall be sufficient for an eight-lane mainline.
Existing Overcrossing:	Reconstruct embankment slope to match toe of proposed overcrossing.
Exit Ramps:	Northbound - Reconstruct ramp terminus to match widened Elkhorn Boulevard.

Diagonal Entrance Ramps:	Southbound - Reconstruct ramp terminus to match widened Elkhorn Boulevard.
Loop Entrance Ramps:	Northbound - Reconstruct a one-lane ramp to match widened Elkhorn Boulevard.
Streetlighting:	As required
Signalization:	Revise existing signalization at the northbound and southbound exit ramp terminus
Striping and Streetsigns:	As required
Drainage:	Modify existing drainage to conform to proposed interchange.

Preliminary Estimate of Costs
For
Metro Air Park
Project Study Report
SR99/Elkhorn Boulevard Interchange Widening
Stage One
Phase 3
SR99-2

January 2006

Item	Description	Quantity	Unit	Unit Price	Total
1.	Clearing & Grubbing	1	JOB	$25,000.00	$25,000.00
2.	Imported Borrow	100,200	m^3	$15.75	$1,578,150.00
3.	Roadway Excavation	61,170	m^3	$18.00	$1,101,060.00
4.	Asphalt Concrete	5,566	Tonne	$70.00	$389,620.00
5.	Aggregate Base (CL 2)	14,393	Tonne	$33.00	$474,969.00
6.	Aggregate Subbase	8,736	Tonne	$27.50	$240,240.00
7.	Minor Concrete (Curb & Gutter)	302	m^3	$365.00	$110,230.00
8.	Minor Concrete (Sidewalk)	163	m^3	$396.00	$64,548.00
9.	Drainage	1	JOB	$82,500.00	$82,500.00
10.	Metal Beam Guard Railing	60	m	$102.30	$6,138.00
11.	Water Pollution Control	1	LS	$165,000.00	$165,000.00
12.	Right of Way Acquisition (res)	1	JOB	$39,160.00	$39,160.00
13.	Construction Area Signs	1	LS	$16,500.00	$16,500.00
14.	Traffic Control System	1	LS	$220,000.00	$220,000.00
15.	Pavement Striping	1	JOB	$11,000.00	$11,000.00
16.	Signing	1	JOB	$110,000.00	$110,000.00
17.	Street Lighting	21	EA	$4,235.00	$88,935.00
18.	Minor Items	1	LS	$236,153.00	$236,153.00
19.	Supplemental Work	1	LS	$495,920.00	$495,920.00
20.	Concrete Bridge (18m x 77m)	1,386	m^2	$1,870.00	$2,591,820.00
21.	Retaining Wall at Existing Abutment	1	JOB	$165,000.00	$165,000.00
22.	Structure Mobilization	1	LS	$275,682.00	$275,682.00
	Subtotal SR99-2				$8,487,625.00
	Fair Share 44%				$3,734,555.00
	Engineering 25% (Public)				$933,639.00
	Contingencies 15% (Public)				$560,183.00
	Total SR99-2				$5,228,377.00

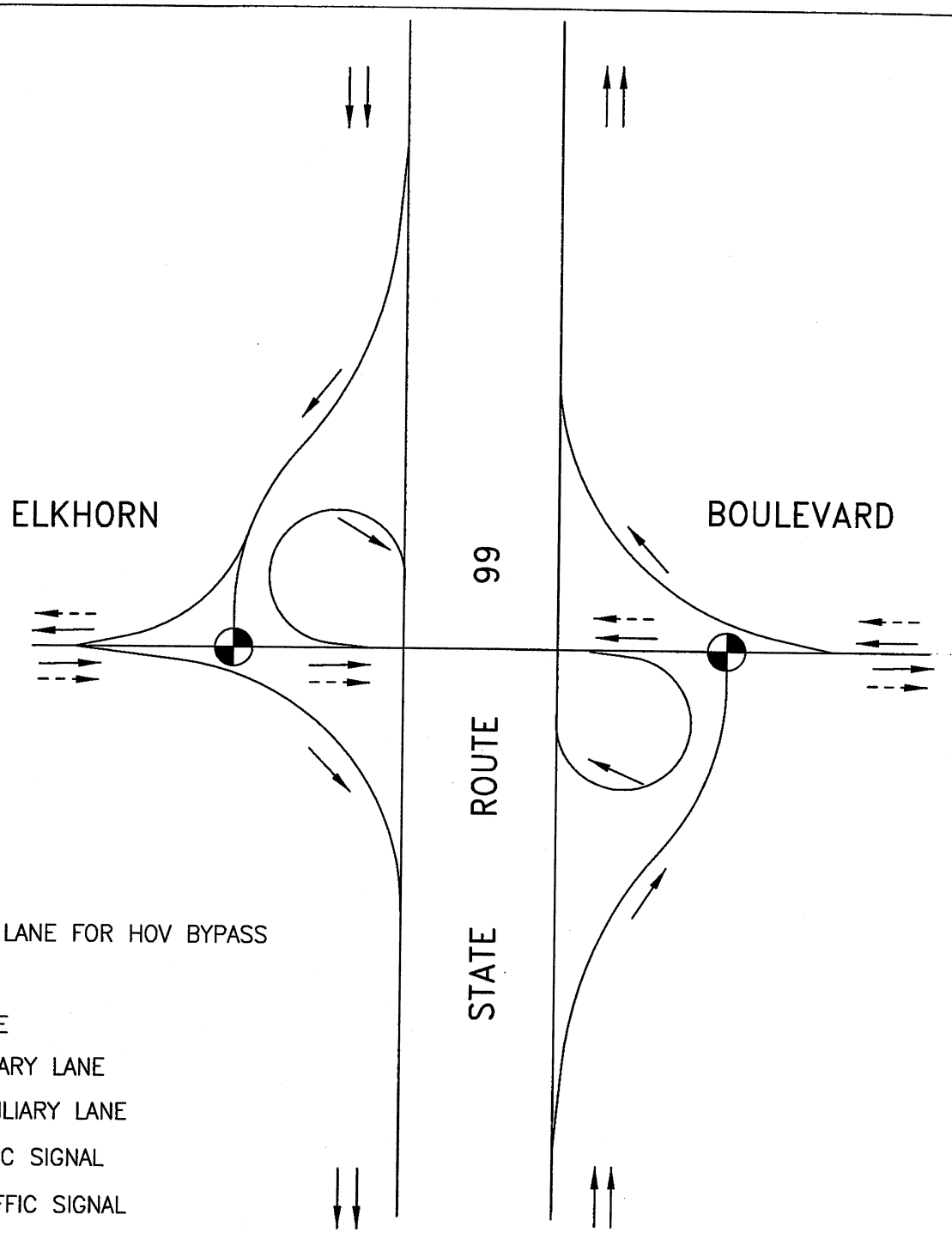

-*- = INCLUDES ONE LANE FOR HOV BYPASS

——→ = EXISTING LANE

- - → = PROPOSED LANE

▬▬→ = EXISTING AUXILIARY LANE

⇨ = PROPOSED AUXILIARY LANE

◐ = EXISTING TRAFFIC SIGNAL

⊗ = PROPOSED TRAFFIC SIGNAL

Stantec Consulting Inc.
2590 Venture Oaks Way
Sacramento, CA 95833-3288
Tel. 916.569.2500
Fax. 916.921.9274
www.stantec.com
Stantec

METRO AIR PARK
STATE ROUTE 99
ELKHORN BOULEVARD
STAGE ONE

PROJECT
SR99-2

V:\52844\Active\84471010\Exhibits\Volume 2 Exhibits\fig-1.dwg 5/30/03 2:27pm cskinner

PROJECT NO. PHASE 3 SR99-3
SR-99/ELVERTA ROAD INTERCHANGE - STAGE ONE

Introduction

It is proposed to construct the first phase of a four-lane Par-Clo Type L-9 interchange to replace the existing at-grade intersection for SR-99 and Elverta Road.

Background

This facility is the first project for the ER/SR-99 interchange and will be funded as a 55% fair share component of the Metro Air Park Facilities Financing Plan.

Existing Facilities

Currently, there is an at-grade-intersection at this location with signalization. SR-99 is constructed as a four-lane highway with acceleration and deceleration lanes, and left-turn lanes. The southbound lanes are transitioned to the west to allow for room within the median for two left-turn lanes and two acceleration lanes along with right-turn deceleration/acceleration lanes for each direction. A drainage canal running west to east follows Elverta road and has been relocated adjacent to the SR-99 right-of-way by a previous project to cross SR-99 approximately 1300 LF north of the existing intersection. Miscellaneous drainage culverts and streetlight conduits exist within the intersection. An existing overhead power line runs east-west along Elverta Road.

Proposed Facilities

Right-of-Way:	12 ha. inclusive of all interchange components and a 3.6 m strip for the southbound exit ramp auxiliary lane.
Embankment:	For the ultimate interchange configuration.
Elverta Road:	Four-lane facility within the interchange with two 3.6 m west bound lanes, two 3.6 m east bound lanes, a 3.6 m median tapering to 1.2 m at the overcrossing, 1.5 m bike lane on each side and a 1.5 m sidewalk on one side.
Overcrossing:	Four-lane facility with two 3.6 m west bound lanes, two 3.6 m east bound lanes, 1.2 m median, 1.5 m bike lane on each side and a 1.5 m sidewalk on one side. The span shall be sufficient for an eight-lane mainline.
Exit Ramps:	Northbound - One-lane diagonal exit ramp with dual left and single right turn lanes. Southbound - One-lane diagonal exit ramp with single left and dual right turn lanes and sufficient right-of-way for a two-lane southbound ramp.
Diagonal Entrance Ramps:	Northbound and Southbound - One-lane entrance ramp.

Loop Entrance Ramps:	Northbound and Southbound - One-lane entrance ramp.
Auxiliary Lane:	Right-of-way only for the SOUTHBOUND diagonal exit ramp auxiliary lane.
Streetlighting:	As required
Signalization:	Northbound and Southbound exit ramp terminus
Striping and Street signs:	As required
Drainage:	Relocate existing drainage canal around proposed interchange adjacent to proposed right-of-way crossing SR-99 at existing location and construct the drainage within the interchange as required
Utilities:	Relocate all existing utilities as required

Preliminary Estimate of Costs
For
Metro Air Park
Project Study Report
SR99/Elverta Road Interchange
Stage One
Phase 3
SR99-3

January 2006

Item	Description	Quantity	Unit	Unit Price	Total
1.	Clearing & Grubbing	1	LS	$25,000.00	$25,000.00
2.	Imported Borrow	214,100	m^3	$15.75	$3,372,075.00
3.	Roadway Excavation	16,050	m^3	$18.00	$288,900.00
4.	Asphalt Concrete	16,200	Tonne	$70.00	$1,134,000.00
5.	Aggregate Base (CL 2)	33,630	Tonne	$33.00	$1,109,790.00
6.	Aggregate Subbase	30,984	Tonne	$27.50	$852,060.00
7.	Minor Concrete (Curb & Gutter)	209	m^3	$365.00	$76,285.00
8.	Minor Concrete (Sidewalk)	82	m^3	$396.00	$32,472.00
9.	Drainage	1	JOB	$355,000.00	$355,000.00
10.	Metal Beam Guard Railing	60	m	$102.30	$6,138.00
11.	Water Pollution Control	1	LS	$200,000.00	$200,000.00
12.	Relocate Joint Pole	25	EA	$2,420.00	$60,500.00
13.	Channel Relocation	2,440	m	$110.00	$268,400.00
14.	Right of Way Acquisition (ag)	1	JOB	$68,200.00	$68,200.00
15.	Construction Area Signs	1	LS	$16,500.00	$16,500.00
16.	Traffic Control System	1	LS	$220,000.00	$220,000.00
17.	Pavement Striping	1	JOB	$33,000.00	$33,000.00
18.	Signing	1	JOB	$150,000.00	$150,000.00
19.	Street Lighting	2	EA	$4,235.00	$8,470.00
20.	Minor Items	1	LS	$413,840.00	$413,840.00
21.	Supplemental Work	1	LS	$869,063.00	$869,063.00
22.	Concrete Bridge (21m x 77m)	1617	m^2	$1,870.00	$3,023,790.00
23.	Structure Mobilization	1	LS	$302,379.00	$302,379.00
	Subtotal SR99-3				$12,885,862.00
	Fair Share 55%				$7,087,224.00
	Engineering 25% (Public)				$1,771,806.00
	Contingencies 15% (Public)				$1,063,084.00
	Total SR99-3				$9,922,114.00

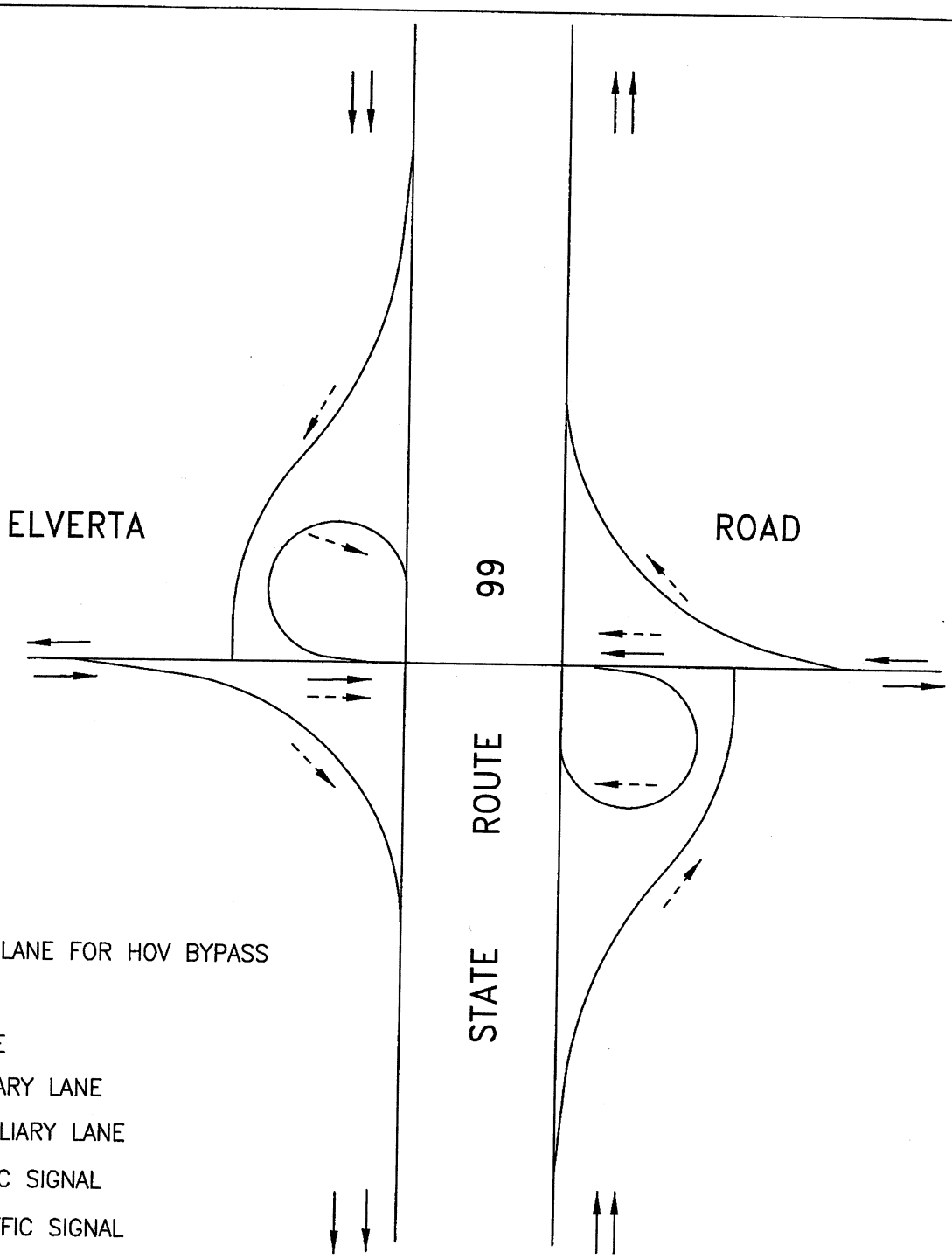

-*- = INCLUDES ONE LANE FOR HOV BYPASS

——→ = EXISTING LANE

- - → = PROPOSED LANE

▬▬→ = EXISTING AUXILIARY LANE

⇨ = PROPOSED AUXILIARY LANE

◐ = EXISTING TRAFFIC SIGNAL

⊗ = PROPOSED TRAFFIC SIGNAL

Stantec Consulting Inc.
2590 Venture Oaks Way
Sacramento, CA 95833-3288
Tel. 916.569.2500
Fax. 916.921.9274
www.stantec.com
Stantec

METRO AIR PARK
STATE ROUTE 99
ELVERTA ROAD
STAGE ONE

PROJECT
SR99-3

V:\52844\Active\84471010\Exhibits\Volume 2 Exhibits\fig-1.dwg 5/30/03 2:26pm cakihner

PROJECT NO. PHASE 4 SR99-4
SR-99/ELKHORN BOULEVARD INTERCHANGE WIDENING - STAGE TWO

Introduction

It is proposed to construct the second phase widening of the existing interchange to a six-lane Par-Clo Type L-9 interchange.

Background

This facility is the second project for widening the EB/SR-99 interchange and will be funded as a 44% fair share component of the Metro Air Park Facilities Financing Plan.

Existing Facilities

Currently, the SR-99/Elkhorn Boulevard interchange is constructed as a two-lane Par-Clo Type L-9 interchange. SR-99 is constructed as a four-lane freeway with a 46-foot median and 10-foot shoulders. Elkhorn Boulevard is constructed as a two-lane arterial with an overcrossing that is 47.75 feet wide with a 12 foot lane and eight foot shoulder each direction and a five foot sidewalk on the north side. The SR-99 exit/entrance ramps are as follows: northbound and southbound single-lane diagonal exit ramps with a two-lane termination at Elkhorn Boulevard; northbound and southbound single-lane loop entrance ramps; northbound and southbound single-lane diagonal entrance ramps. All existing channels and utilities have been relocated outside of the interchange right-of-way that is sufficient to construct the proposed facility. Project SR99-1 and SR99-2 will exist at time of construction.

Proposed Facilities

Elkhorn Boulevard:	Widen within the median to a six-lane facility with three 3.6 m west bound lanes, three 3.6 m east bound lanes, a 4.3 m median tapering to a 1.2 m median at the overcrossing, 1.5 m bike lane on each side and a 1.5 m sidewalk on the north side only.
Overcrossing:	Restripe to provide three 3.6 m west bound lanes, three 3.6 m east bound lanes, a 1.2 m median, 1.5 m bike lane on each side and a 1.5 m sidewalk on the north side only.
Striping and Streetsigns:	As required.

Preliminary Estimate of Costs
For
Metro Air Park
Project Study Report
SR99/Elkhorn Boulevard Interchange Widening
Stage Two
Phase 4
SR99-4

January 2006

Item	Description	Quantity	Unit	Unit Price	Total
1.	Clearing & Grubbing	1	JOB	$5,000.00	$5,000.00
2.	Roadway Excavation	3,825	m^3	$18.00	$68,850.00
3.	Asphalt Concrete	1,622	Tonne	$70.00	$113,540.00
4.	Aggregate Base (CL 2)	7,150	Tonne	$33.00	$235,950.00
5.	Minor Concrete (Curb & Gutter)	175	m^3	$365.00	$63,875.00
6.	Drainage	1	JOB	$22,000.00	$22,000.00
7.	Water Pollution Control	1	LS	$16,500.00	$16,500.00
8.	Traffic Control System	1	LS	$55,000.00	$55,000.00
9.	Pavement Striping	1	JOB	$5,500.00	$5,500.00
10.	Minor Items	1	LS	$29,311.00	$29,311.00
11.	Supplemental Work	1	LS	$61,553.00	$61,553.00
	Subtotal SR99-4				$677,079.00
	Fair Share 44%				$297,915.00
	Engineering 25% (Public)				$74,479.00
	Contingencies 15% (Public)				$44,687.00
	Total SR99-4				$417,081.00

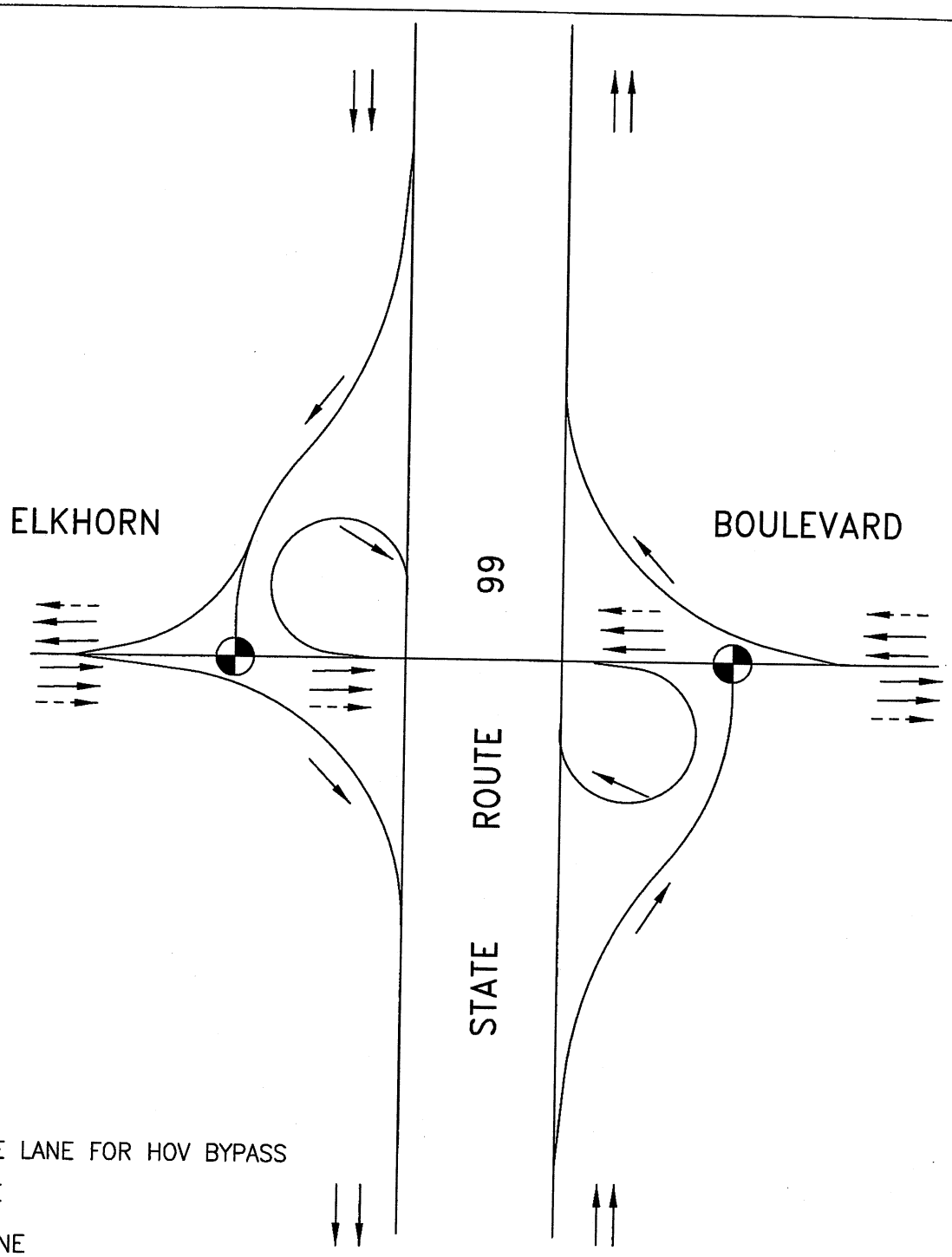

* = INCLUDES ONE LANE FOR HOV BYPASS

= EXISTING LANE

= PROPOSED LANE

= EXISTING AUXILIARY LANE

= PROPOSED AUXILIARY LANE

= EXISTING TRAFFIC SIGNAL

= PROPOSED TRAFFIC SIGNAL

Stantec Consulting Inc.
2590 Venture Oaks Way
Sacramento, CA 95833-3288
Tel. 916.569.2500
Fax. 916.921.9274
www.stantec.com

METRO AIR PARK
STATE ROUTE 99
ELKHORN BOULEVARD
STAGE TWO

PROJECT
SR99-4

V:\52844\Active\84471010\Exhibits\Volume 2 Exhibits\fig-1.dwg 5/30/03 2:25pm cskinner

PROJECT NO. PHASE 6 SR99-5
SR-99/MEISTER WAY OVERCROSSING

Introduction

It is proposed to construct a four-lane overcrossing for proposed Meister Way approximately mid-way between the I-5/SR-99 interchange and the SR-99/Elkhorn Boulevard interchange.

Background

This facility will be constructed as a 61% fair share component of the Metro Air Park Facilities Financing Plan.

Existing Facilities

Currently, Meister Way is not constructed for public access. At the proposed location SR-99 is constructed as a four-lane freeway with ten-foot shoulders and a 46-foot median within a 210-foot right-of-way. Minor drainage ditches exist on each side adjacent to the freeway right-of-way.

Proposed Facilities

Right-of-Way:	Provide right-of-way 3 m beyond the approach embankment toe of slope.
Overcrossing:	Four-lane facility with 3.6 m lanes, a 1.2 m median, 1.5 m bike lanes and a 1.5 m sidewalk on one side. The span shall be sufficient for an eight-lane mainline plus northbound auxiliary lane.
Approach:	Four-lane facility with 3.6 m lanes, a 3.6 m striped median tapering to a 1.2 m striped median at the overpass, 1.5 m bike lanes on each side, and a 1.5 m sidewalk on one side.
Utilities:	Relocate all utilities as required
Striping and Streetsigns:	As required
Drainage:	Relocate and convey existing drainage ditches under Meister Way with culverts.

Preliminary Estimate of Costs
For
Metro Air Park
Project Study Report
SR99/Meister Way Overcrossing
Phase 6
SR99-5

January 2006

Item	Description	Quantity	Unit	Unit Price	Total
1.	Clearing & Grubbing	1	JOB	$1,000.00	$1,000.00
2.	Imported Borrow	45,000	m^3	$15.75	$708,750.00
3.	Asphalt Concrete	2,293	Tonne	$70.00	$160,510.00
4.	Aggregate Base (CL 2)	10,296	Tonne	$33.00	$339,768.00
5.	Minor Concrete (Curb & Gutter)	113	m^3	$365.00	$41,245.00
6.	Minor Concrete (Sidewalk)	49	m^3	$396.00	$19,404.00
7.	Drainage	1	JOB	$27,500.00	$27,500.00
8.	Metal Beam Guard Railing	60	m	$102.30	$6,138.00
9.	Water Polution Control	1	LS	$27,500.00	$27,500.00
10.	Right of Way Acquisition (res)	1	JOB	$195,800.00	$195,800.00
11.	Right of Way Acquisition (ag)	1	JOB	$68,200.00	$68,200.00
12.	Construction Area Signs	1	LS	$16,500.00	$16,500.00
13.	Traffic Control System	1	LS	$82,500.00	$82,500.00
14.	Pavement Striping	1	JOB	$16,500.00	$16,500.00
15.	Signing	1	JOB	$13,750.00	$13,750.00
16.	Street Lighting	12	EA	$3,850.00	$46,200.00
17.	Minor Items	1	LS	$88,563.00	$88,563.00
18.	Supplemental Work	1	LS	$185,983.00	$185,983.00
19.	Concrete Bridge (24.1m x 58n)	1,400	m^2	$1,870.00	$2,618,000.00
	Subtotal SR99-5				$4,663,811.00
	Fair Share 61%				$2,844,925.00
	Engineering 25% (Public)				$711,231.00
	Contingencies 15% (Public)				$426,739.00
	Total SR99-5				$3,982,895.00

PROJECT PHASE 6 SR99-6
SR-99/ELKHORN BOULEVARD INTERCHANGE WIDENING - FINAL STAGE

Introduction

It is proposed to construct the final phase of a six-lane Par-Clo Type L-9 interchange.

Background

This is the final project for this facility and will be funded as a component at the Metro Air Park Facilities Financing Plan (44% fair share).

Existing Facilities

Currently, the SR-99/Elkhorn Boulevard interchange is constructed as a two-lane Par-Clo Type L-9 interchange. SR-99 is constructed as a four-lane freeway with a 46-foot median and 10-foot shoulders. Elkhorn Boulevard is constructed as a two-lane arterial with an overcrossing that is 47.75 feet wide with a 12 foot lane and eight foot shoulder each direction and a five foot sidewalk on the north side. The SR-99 exit/entrance ramps are as follows: northbound and southbound single-lane diagonal exit ramps with a two-lane termination at Elkhorn Boulevard; northbound and southbound single-lane loop entrance ramps; northbound and southbound single-lane diagonal entrance ramps. All existing channels and utilities have been relocated outside of the interchange right-of-way which is sufficient to construct the proposed facility. Project Nos SR99-1, SR99-2 and SR99-4 will exist at time of construction.

Proposed Facilities

Right-of-Way:	Exiting right-of-way for the interchange. 0.3 ha. to provide a 3.6 m strip for the northbound exit ramp auxiliary lane.
Exit Ramps:	Northbound - Widen the existing one-lane ramp to a two-lane ramp with dual left and single right turn lanes at the ramp terminal. Southbound - Widen the existing one-lane ramp to two-lanes with dual left and right turn lanes at the ramp terminal.
Entrance Ramps:	Add ramp metering and HOV bypass lanes to all entrance ramps.
Auxiliary Lanes:	Add a northbound auxiliary lane from the southbound I-5/NORTHBOUND SR-99 connector ramp to the northbound Elkhorn Boulevard exit ramp constructed to main lane standards. Add a 400 m auxiliary lane prior to the southbound exit ramp.

Preliminary Estimate of Costs
For
Metro Air Park
Project Study Report
SR99/Elkhorn Boulevard Interchange Widening
Final Stage
Phase 6
SR99-6

January 2006

Item	Description	Quantity	Unit	Unit Price	Total
1.	Clearing & Grubbing	1	LS	$10,000.00	$10,000.00
2.	Roadway Excavation	13,765	m^3	$20.00	$275,300.00
3.	Asphalt Concrete	11,556	Tonne	$70.00	$808,920.00
4.	Aggregate Base (CL 2)	16,448	Tonne	$40.00	$657,920.00
5.	Aggregate Subbase	28,043	Tonne	$35.00	$981,505.00
6.	Plastic Pipe (Edge Drain)	3,965	m	$38.50	$152,652.50
7.	Drainage	1	JOB	$50,000.00	$50,000.00
8.	Water pollution Control	1	LS	$110,000.00	$110,000.00
9.	Right of Way Acquisition (ag)	1	JOB	$68,200.00	$68,200.00
10.	Relocate Call Box	1	EA	$15,000.00	$15,000.00
11.	Construction Area Signs	1	LS	$50,000.00	$50,000.00
12.	Pavement Striping	1	JOB	$25,000.00	$25,000.00
13.	Signing	1	JOB	$55,000.00	$55,000.00
14.	Ramp Meter System	4	EA	$150,000.00	$600,000.00
15.	Minor Items	1	LS	$250,000.00	$250,000.00
16.	Supplemental Work	1	LS	$410,950.00	$410,950.00
	Subtotal SR99-6				$4,520,447.50
	Fair Share 44%				$1,988,996.90
	Engineering 25% (Public)				$497,249.23
	Contingencies 15% (Public)				$298,349.54
	Total SR99-6				$2,784,595.66

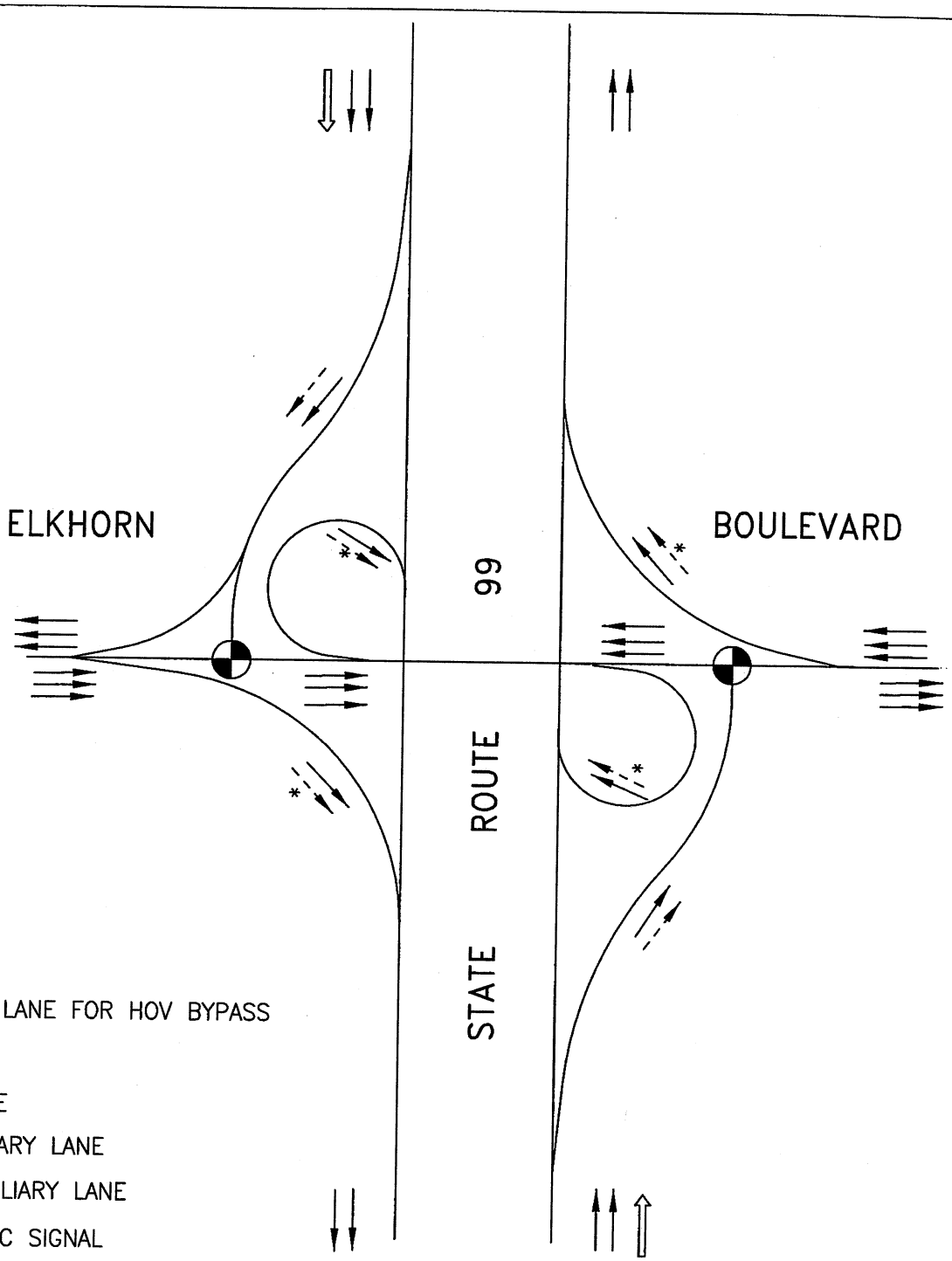

* = INCLUDES ONE LANE FOR HOV BYPASS

= EXISTING LANE

= PROPOSED LANE

= EXISTING AUXILIARY LANE

= PROPOSED AUXILIARY LANE

= EXISTING TRAFFIC SIGNAL

= PROPOSED TRAFFIC SIGNAL

Stantec Consulting Inc.
2590 Venture Oaks Way
Sacramento, CA 95833-3288
Tel. 916.569.2500
Fax. 916.921.9274
www.stantec.com

METRO AIR PARK
STATE ROUTE 99
ELKHORN BOULEVARD
FINAL STAGE

PROJECT
SR99-6

V:\32844\Active\84471010\Exhibits\Volume 2 Exhibits\fig-1.dwg 5/30/03 2:25pm cskinner

PROJECT NO. PHASE 6 SR99-7
SR-99/ELVERTA ROAD INTERCHANGE - FINAL STAGE

Introduction

It is proposed to construct the final phase of the first phase of a four-lane Par-Clo Type L-9 interchange to replace the existing at-grade intersection for SR-99 and Elverta Road.

Background

This facility is the final project for the ER/SR-99 interchange and will be funded as a 55% fair share component of the Metro Air Park Facilities Financing Plan.

Existing Facilities

Currently, there is an at-grade-intersection at this location with signalization. SR-99 is constructed as a four-lane highway with acceleration and deceleration lanes, and left-turn lanes. The southbound lanes are transitioned to the west to allow for room within the median for two left-turn lanes and two acceleration lanes along with right-turn deceleration/acceleration lanes for each direction. A drainage canal running west to east follows Elverta road and has been relocated adjacent to the SR-99 right-of-way by a previous project to cross SR-99 approximately 1300 LF north of the existing intersection. Miscellaneous drainage culverts and streetlight conduits exist within the intersection. An existing overhead power line runs east-west along Elverta Road. Project No. SR99-3 will exist at time of construction.

Proposed Facilities

Diagonal Entrance Ramps:	Northbound and Southbound - Add ramp metering with HOV bypass lanes.
Loop Entrance Ramps:	Northbound and Southbound - Add ramp metering with HOV bypass lanes.
Striping and Streetsigns:	As required

Preliminary Estimate of Costs
For
Metro Air Park
Project Study Report
SR99/Elverta Road Interchange
Final Stage
Phase 6
SR99-7

January 2006

Item	Description	Quantity	Unit	Unit Price	Total
1.	Clearing & Grubbing	1	LS	$10,000.00	$10,000.00
2.	Roadway Excavation	4,200	m^3	$18.00	$75,600.00
3.	Asphalt Concrete	3,211	Tonne	$70.00	$224,770.00
4.	Aggregate Base (CL 2)	4,570	Tonne	$33.00	$150,810.00
5.	Aggregate Subbase	7,792	Tonne	$27.50	$214,280.00
6.	Plastic Pipe (Edge Drain)	2,745	m	$38.50	$105,682.50
7.	Drainage	1	JOB	$16,500.00	$16,500.00
8.	Traffic Control System	1	LS	$82,500.00	$82,500.00
9.	Pavement Striping	1	JOB	$11,000.00	$11,000.00
10.	Signing	1	JOB	$27,500.00	$27,500.00
11.	Ramp Meter System	4	LS	$92,400.00	$369,600.00
12.	Minor Items	1	LS	$64,412.00	$64,412.00
13.	Supplemental Work	1	LS	$135,265.00	$135,265.00
	Subtotal SR99-7				$1,487,919.50
	Fair Share 55%				$818,356.00
	Engineering 25% (Public)				$204,589.00
	Contingencies 15% (Public)				$122,753.40
	Total SR99-7				$1,145,698.40

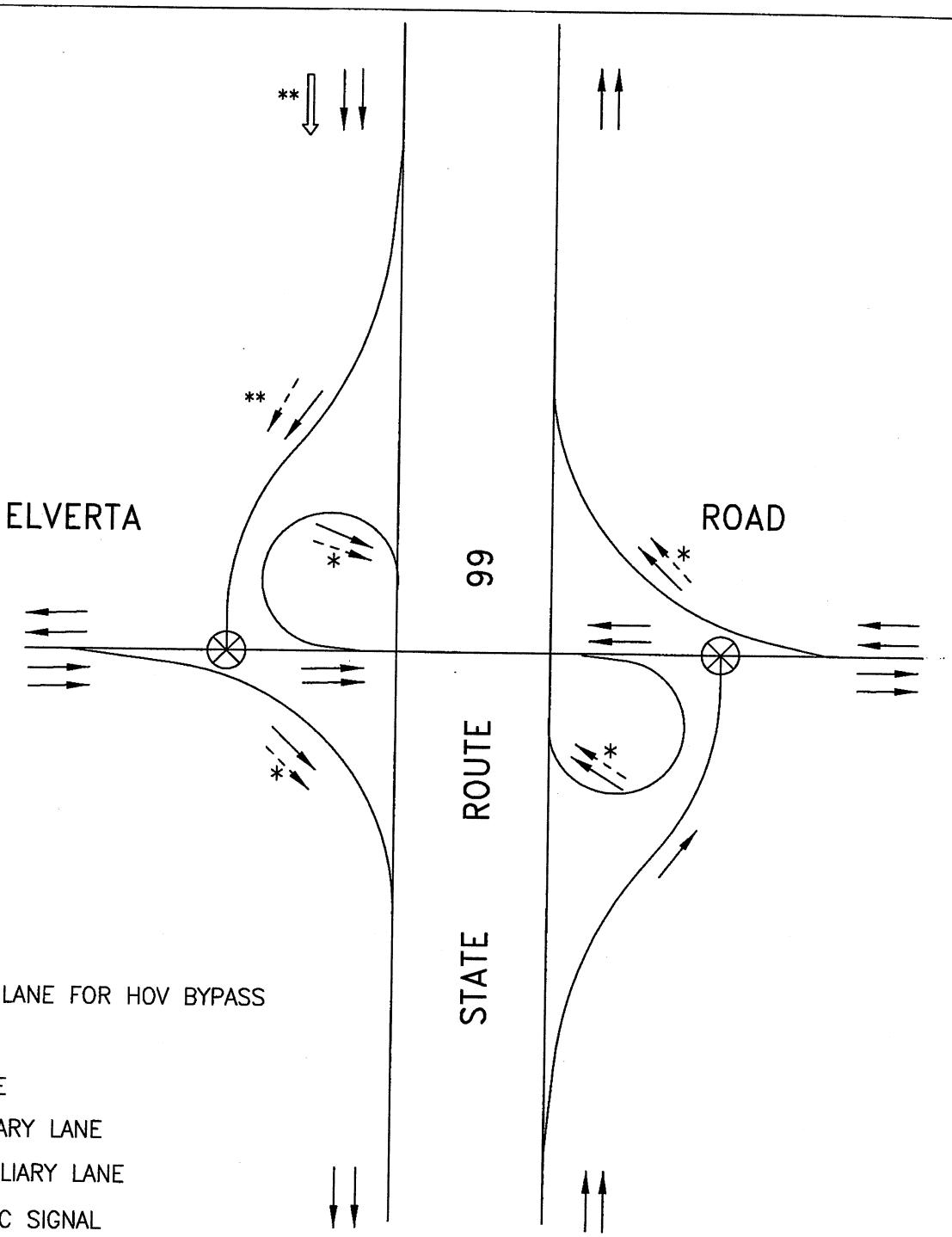

** = ROW ONLY

*--► = INCLUDES ONE LANE FOR HOV BYPASS

——► = EXISTING LANE

- - ► = PROPOSED LANE

▬► = EXISTING AUXILIARY LANE

⇨ = PROPOSED AUXILIARY LANE

⊕ = EXISTING TRAFFIC SIGNAL

⊗ = PROPOSED TRAFFIC SIGNAL

Stantec Consulting Inc.
2590 Venture Oaks Way
Sacramento, CA 95833-3288
Tel. 916.569.2500
Fax. 916.921.9274
www.stantec.com
Stantec

METRO AIR PARK
STATE ROUTE 99
ELVERTA ROAD
FINAL STAGE

PROJECT
SR99-7

V:\52844\Active\84471010\Exhibits\Volume 2 Exhibits\fig-1.dwg 5/30/03 2:25pm cakinnar

PROJECT NO. PHASE 1AA/1AB DRN-1.1
OUTFALL AT MEISTER WAY / ROAD "B"

Introduction

It is proposed to construct a drain line along Road "B" from Elkhorn Boulevard to Meister Way and continuing along Meister Way to Metro Parkway. Then construct drain line from Metro Parkway to the detention basin within the open space.

Background

The storm lines are the first phase of drainage required within Meister Way.

Existing Facilities

Currently an existing drainage canal and irrigation canal run parallel to each other along the Meister Way alignment.

Proposed Facilities

Right-Of-Way:	Within the proposed Road "B" and Meister Way right-of-way
72" Drain Pipe:	Construct a 78" Drain Line from Elkhorn Boulevard along Road "B" to Meister Way.
84" Drain Pipe:	Construct 84" drain line from Meister Way to Road "F".
90" Drain Pipe:	Construct 90" drain line from Road "F" to Tie in at Detention Basin #1.

Preliminary Estimate of Costs
For
Metro Air Park
Drainage Improvements
Phase 1AA / Phase 1AB
DRN-1.1

October 2006

Item	Description	Quantity	Unit	Unit Price	Total
	(Outfall @ Meister Way/Road "B")				
1.	78" Storm Drain	850	LF	$212.86	$180,934.51
2.	84" Storm Drain	1,650	LF	$233.46	$385,215.41
3.	90" Storm Drain	800	LF	$247.20	$197,757.64
4.	60" Type A Saddle Manhole	8	EA	$6,591.92	$52,735.37
	Subtotal DRN-1.1				$816,642.94
	Engineering 15% (Private)				$122,496.44
	Contingency 10% (Private)				$81,664.29
	Construction Management 3% (Private)				$24,499.29
	SWPPP 3% (Private)				$24,499.29
	Total DRN-1.1				$1,069,802.25
	Funded with Series 2004 A Bond Proceeds				$690,389.00
	Funded with Series 2006 B Bond Proceeds				$379,413.25

PROJECT NO. PHASE 1AA/1AB DRN-2.1
ROAD "G" OUTFALL

Introduction

It is proposed to construct a drain line along Road "G" from Metro Parkway to the Golf Course Boundary and continuing within the golf course with a storm drain outfall along the same alignment. (for continuation of the outfall pipe within the golf course, see DRN-5)

Background

This facility is the first phase of the drainage system within Road "G" and the final phase of the drainage system within the 30 foot drainage easement to be constructed as a component of the Metro Air Park Facilities Financing Plan.

Existing Facilities

Currently there are no existing facilities.

Proposed Facilities

Right-of-Way: 48-foot wide right of way within proposed Road "G" and 55-foot wide drainage easement across private property to the golf course.

Drain System: Construct a drain line from 100' west of Metro Parkway to the Golf Course Boundary. (for continuation of the outfall pipe within the golf course, see DRN-5)

Preliminary Estimate of Costs
For
Metro Air Park
Drainage Improvements
Phase 1AA / Phase 1AB
DRN-2.1

October 2006

Item	Description	Quantity	Unit	Unit Price	Total
	Road "G" Outfall (Metro Air Parkway to Golf Course)				
1.	54" Storm Drain	1,130	LF	$102.83	$116,201.81
2.	60" Storm Drain	650	LF	$113.12	$73,525.92
3.	60" Type A Saddle Manhole	3	EA	$4,936	$14,808.02
	Subtotal DRN-2.1				$204,535.75
	Engineering 15% (Private)				$30,680.36
	Contingency 10% (Private)				$20,453.58
	Construction Management 3% (Private)				$6,136.07
	SWPPP 3% (Private)				$6,136.07
4.	RW PIPE & Overland Release	2.10	AC	$22,500.00	$47,250.00
	Total DRN-2.1				$315,191.83
	Funded with Series 2004 A Bond Proceeds				$278,173.00
	Funded with Series 2006 B Bond Proceeds				$37,018.83

PROJECT PHASE 1AA DRN-3
DETENTION/WATER QUALITY BASIN WITHIN OPEN SPACE

Introduction

It is proposed to construct Detention/water quality Basin No. 1 within the open space south of Meister Way.

Background

This project will be constructed as a component of the Metro Air Park Facilities Financing Plan.

Existing Facilities

Construction for this project was a part of the rough grading and drainage improvements that were completed in January 2005.

Proposed Facilities

Right-of-Way:	Acquire within the proposed open space between Elkhorn Boulevard and Road "F" north of Interstate 5. (Right-of-Way for SWR 2, WTR 6 and WTR 8 are included in this acquisition).
Detention/Water Quality Basins:	Detention/water quality basin No. 1 will be constructed.
Rip Rap	Add rip-rap in basin.
Fencing	Construct Fencing around the perimeter of the basin.
Access Road	Construct perimeter access road.
Ramp	Construct 12' concrete access ramp.
Storm Drain	Construct storm drainage improvements.

Preliminary Estimate of Costs
For
Metro Air Park
Drainage Improvements
Phase 1AA
DRN-3

October 2006

Item	Description	Quantity	Unit	Unit Price	Total
	(Detention Facilities Within Open Space)				
1.	Excavation - Detention Basin	247,000	CY	$5.10	$1,259,700.00
2.	Fencing	4,100	LF	$10.00	$41,000.00
3.	Perimeter Access Road	61,400	SF	$1.40	$85,960.00
4.	12' Concrete Access Ramp	7,910	SF	$8.00	$63,280.00
5.	SD Improvements	1	LS	$326,000.00	$326,000.00
	Subtotal DRN-3				$1,775,940.00
	Engineering 15% (Private)				$266,391.00
	Contingency 5% (Private)				$88,797.00
	Construction Management 3% (Private)				$53,278.20
	SWPPP 1% (Private)				$17,759.40
6.	ROW Acquisition	22.5	AC	$55,000.00	$1,237,500.00
	Total DRN-3				$3,439,665.60
	Funded with Series 2004 A Bond Proceeds				$3,439,665.60

PROJECT PHASE 1AA DRN-4
DETENTION/WATER QUALITY BASINS WITHIN OPEN SPACE

Introduction

It is proposed to construct Detention/water quality Basin No. 2 within the open space north of Meister Way.

Background

This project will be constructed as a component of the Metro Air Park Facilities Financing Plan.

Existing Facilities

Construction for this project was a part of the rough grading and drainage improvements that were completed in January 2005.

Proposed Facilities

Right-Of-Way:	Within the open space lot as approved as part of the tentative map between Elkhorn Boulevard and Meister Way.
Detention/Water Quality Basins:	Detention/water quality basin No. 2 will be constructed.
Rip Rap	Add rip-rap in basin.
Fencing	Construct Fencing around the perimeter of the basin.
Access Road	Construct perimeter access road.
Ramp	Construct 12' concrete access ramp.
Drainage	Construct French drain and low flow pipe

Preliminary Estimate of Costs
For
Metro Air Park
Drainage Improvements
Phase 1AA
DRN-4

October 2006

Item	Description	Quantity	Unit	Unit Price	Total
	(Detention Facilities Within Open Space)				
1.	Excavation	285,050	CY	$5.15	$1,468,008.00
2.	Fencing	6,130	LF	$10.00	$61,300.00
3.	Perimeter Access Road	84,500	SF	$1.40	$118,300.00
4.	12' Concrete Access Ramp	2,680	SF	$10.00	$26,800.00
5.	French Drain & Inlets	4,620	LF	$80.00	$369,600.00
6.	Misc. Drainage improvements	1	LS	$421,000.00	$421,000.00
	Subtotal DRN-4				$2,465,008.00
	Engineering 15% (Private)				$369,751.20
	Contingency 5% (Private)				$123,250.40
	Construction Management 3% (Private)				$73,950.24
	SWPPP 1% (Private)				$24,650.08
7.	ROW Acquisition	23.1	AC	$55,000.00	$1,270,500.00
	Total DRN-4				$4,327,109.92
	Funded with Series 2004 A Bond Proceeds				$4,327,109.92

PROJECT PHASE 1AA DRN-5
DETENTION/WATER QUALITY BASINS & DRAINAGE FACILITIES WITHIN GOLF COURSE

Introduction

It is proposed to construct detention/water quality basins and open channels within the golf course in accordance with the Master Drainage Plan.

Background

This project will be constructed as a component of the Metro Parkway Facilities Financing Plan.

Existing Facilities

Construction for this project was a part of the rough grading and drainage improvements that were completed in January 2005.

Proposed Facilities

Right-Of-Way:	Rights of Way will be dedicated and easements will be granted to the satisfaction of Sacramento County.
Detention/Water Quality Basins:	Detention/water quality basins will be constructed within the golf course in accordance with the Master Drainage Study.
Pond Inlet & Outlet:	The basins will have inlet and outlet structures with various sized pipes and spillways to control the basin flows. Install all pipes within the golf course boundaries.
Borrow Sites	Borrow sites, as designated on the grading plan, will be used to balance the site to facilitate the drainage plan.
Low Flow Drainage Pipes	Low flow drainage pipe will be constructed in the golf course area to drain nuisance flows.
Swales	Swales through the golf course for drainage.

Preliminary Estimate of Costs
For
Metro Air Park
Drainage Improvements
Phase 1AA
DRN-5

October 2006

Item	Description	Quantity	Unit	Unit Price	Total
	(Golf Course Detention Basins, Borrow Sites, & Low Flow Pipe)				
1.	Excavation	866,000	CY	$4.05	$3,507,300.00
2.	Storm Drain Systems	1	LS	$2,943,300.00	$2,943,300.00
	Subtotal DRN-5				$6,450,600.00
	Engineering 15% (Private)				$967,590.00
	Contingency 5% (Private)				$322,530.00
	Construction Management 3% (Private)				$193,518.00
	SWPPP 1% (Private)				$64,506.00
3.	Drainage Corrider Easements & Basins	80	AC	$22,500.00	$1,800,000.00
	Total DRN-5				$9,798,744.00
	Funded with Series 2004 A Bond Proceeds				$9,798,744.00

PROJECT NO. PHASE 1AA/1AB DRN-6.1
EARTHWORK BALANCE & NCMWC FACILITIES

Introduction

It is proposed to excavate from borrow areas to complete earthwork fills to comply with the Master Drainage Study. This project includes improvements for the highline canal, which is anticipated to remain at this time, as well as alternative irrigation for the "out parcels" as specified below.

Background

This project will be constructed as a component of the Metro Air Park Facilities Financing Plan.

Existing Facilities

DRN-6.1 Item 1, "Borrow to Complete Fills", was completed with the rough grading and drainage improvements that were completed in January 2005.

Proposed Facilities

Borrow to Complete Fill:	Additional cut will be excavated as required to complete fills. The total required quantity will be 490,000 CY – 205,000 CY (cut from Metro Parkway) – 68,000 CY (cut from Elkhorn Boulevard) = 217,000 CY. This portion of the project was completed as a part of the Phase 1AA construction operations.
Offsite NCMWC Improvements:	Replace the highline Canal with 2-60" pipes
Alternative Irrigation:	Construct an irrigation station to serve the parcels east of the north detention basin, south of Elkhorn Blvd, west of future Lone Tree Road, and North of Meister Way. These parcels are not a part of the Metro Air Park project.
South Lake Pump Station:	Construct pump station and piping to later 4A. The pump station will be constructed at South Lake with the intent to serve the "stranded properties" adjacent to Lone Tree Road.

Preliminary Estimate of Costs
For
Metro Air Park
Drainage Improvements
Phase 1AA / Phase 1AB
DRN-6.1

October 2006

Item	Description	Quantity	Unit	Unit Price	Total
	(Reimbursable Golf Course Drainage)				
1.	Borrow to Complete Fills	500,000	CY	$5.40	$2,700,000.00
2.	Offsite NCMWC Improvements	1	LS	$4,075,000.00	$4,075,000.00
3.	Scheler and Guiterrez Alternative Irrigati	1	LS	$196,000.00	$196,000.00
4	South Lake Pump Station	1	LS	$152,500.00	$152,500.00
	Subtotal DRN-6.1				$7,123,500.00
	Engineering 15% (Private)				$1,068,525.00
	Contingency 10% (Private)				$712,350.00
	Construction Management 3% (Private)				$213,705.00
	Total DRN-6.1				$9,118,080.00
	Funded with Series 2004 A Bond Proceeds				$5,824,000.00
	Funded with Series 2006 B Bond Proceeds (Item 2)				$3,268,220.00

PROJECT NO. PHASE 1AA/1AB DRN-9
PUMP STATION (SOUTH)

Introduction

It is proposed to construct a new pump station sump and outfall sized for 270 cfs capacity for ultimate development of Metro Air Park and to install pumps with capacity for 80 cfs discharge for 30% development. Facilities for the ultimate control system will be constructed including panel locations and conduits for future pumps.

Background

This facility is the first phase of improvements to the southerly pump station to be constructed as a component of the Metro Air Park Facilities Financing Plan.

Existing Facility

Currently, the existing drainage flows off-site through Canal Reach No. 8.

Proposed Facility

Sump:	Construct a pump station sump sized for 270 cfs capacity.
Outfall:	Construct an outfall to Canal Reach No. 8 with the ultimate capacity for 100% development of Metro Air Park.
Pumps:	Install pump(s) with capacity for 90 cfs discharge.
Pavement	Pave access road from Meister Way to pump station.
Fencing	Construct fence along perimeter of pump station.
Right-of-Way	Acquire R/W for site and pipeline.
Drain Pipe	Construct storm drain.

Preliminary Estimate of Costs
For
Metro Air Park
Drainage Improvements
Phase 1AA / Phase 1AB
DRN-9

October 2006

Item	Description	Quantity	Unit	Unit Price	Total
	(Pump Station (South))				
1.	270 CFS Pump Station With 90 CFS Pumping capacity	1	JOB	$5,925,000.00	$5,925,000.00
2.	Discharge Piping & Outfall Structure	1	JOB	$990,000.00	$970,000.00
	Subtotal DRN-9				$6,895,000.00
	Engineering 21.0% (Private)				$1,447,092.50
	Contingency 15% (Private)				$1,034,250.00
	Construction Management 3.8% (Private)				$259,418.50
5.	ROW Acquisition Pipelines	0.8	AC	$55,000.00	$44,000.00
	Total DRN-9				$9,679,761.00
	Funded with Series 2004 A Bond Proceeds				$7,814,259.00
	Funded with Series 2006 B Bond Proceeds				$1,865,502.00

PROJECT NO. PHASE 3 DRN-10
PUMP STATION (SOUTH) PUMP UPGRADE

Introduction

It is proposed to install pumps in the southerly Pump Station to add sufficient capacity for 40% development of Metro Air Park.

Background

This facility is the second phase of construction for the southerly Pump Station to be constructed as a component of the Metro Air Park Facilities Financing Plan.

Existing Facility

Project DRN-9 will exist at time of construction which will provide a 270 cfs sump and ultimate outfall required for this project.

Proposed Facility

Pump: Install additional pump(s) to provide a total capacity of 180 cfs.

Preliminary Estimate of Costs
For
Metro Air Park
Drainage Improvements
Phase 3
DRN-10

October 2006

Item	Description	Quantity	Unit	Unit Price	Total
	(Pump Station Upgrade (South))				
1.	Add Pump(s) for 180 cfs capacity	1	JOB	$660,000.00	$660,000.00
	Subtotal DRN-10				$660,000.00
	Engineering 15% (Private)				$99,000.00
	Contingencies 15% (Private)				$99,000.00
	Total DRN-10				$858,000.00

PROJECT NO. PHASE 4 DRN-11
PUMP STATION (SOUTH) UPGRADE

Introduction

It is proposed to install pumps to add sufficient capacity for 100% development of Metro Air Park.

Background

This facility is the third phase of construction for the southerly Pump Station to be constructed as a component of the Metro Air Park Facilities Financing Plan.

Existing Facility

Project DRN-10 will exist at time of construction which will provide a 270 cfs sump and the ultimate outfall required for the development of Metro Air Park.

Proposed Facility

Pump: Install additional pump(s) with capacity for 270 cfs discharge.

PROJECT NO. PHASE 1AA/1AB DRN-14.1
ROAD "F" OUTFALL CHANNEL

Introduction

It is proposed to construct a drain line along Road "F" from Metro Parkway to the Golf Course Boundary.

Background

This facility is the first phase of the drainage system within Road "F" and the final phase of the drainage system within the 30 foot drainage easement to be constructed as a component of the Metro Air Park Facilities Financing Plan.

Existing Facilities

Currently there are no existing facilities.

Proposed Facilities

Right-of-Way:	48-foot wide within proposed Road "F" and 55-foot wide drainage easement across private property to golf course.
Drain System:	Construct a drain line from 100' west of Metro Parkway to the Golf Course Boundary.

Preliminary Estimate of Costs
For
Metro Air Park
Drainage Improvements
Phase 1AA / Phase 1AB
DRN-14.1

October 2006

Item	Description	Quantity	Unit	Unit Price	Total
	Road "F" Outfall (Metro Air Parkway to Golf Course)				
1.	60" Storm Drain	400	LF	$151.06	$60,425.95
2.	66" Storm Drain	1,525	LF	$171.66	$261,788.55
3.	60" Saddle Manhole	4	EA	$6,591.92	$26,367.69
	Subtotal DRN-14.1				$348,582.18
	Engineering 15% (Private)				$52,287.33
	Contingency 10% (Private)				$34,858.22
	Construction Management 3% (Private)				$10,457.47
	SWPPP 3% (Private)				$10,457.47
4.	RW PIPE & Overland Release	2.30	AC	$22,500.00	$51,750.00
	Total DRN-14.1				$508,392.66
	Funded with Series 2004 A Bond Proceeds				$346,441.00
	Funded with Series 2006 B Bond Proceeds				$161,951.66

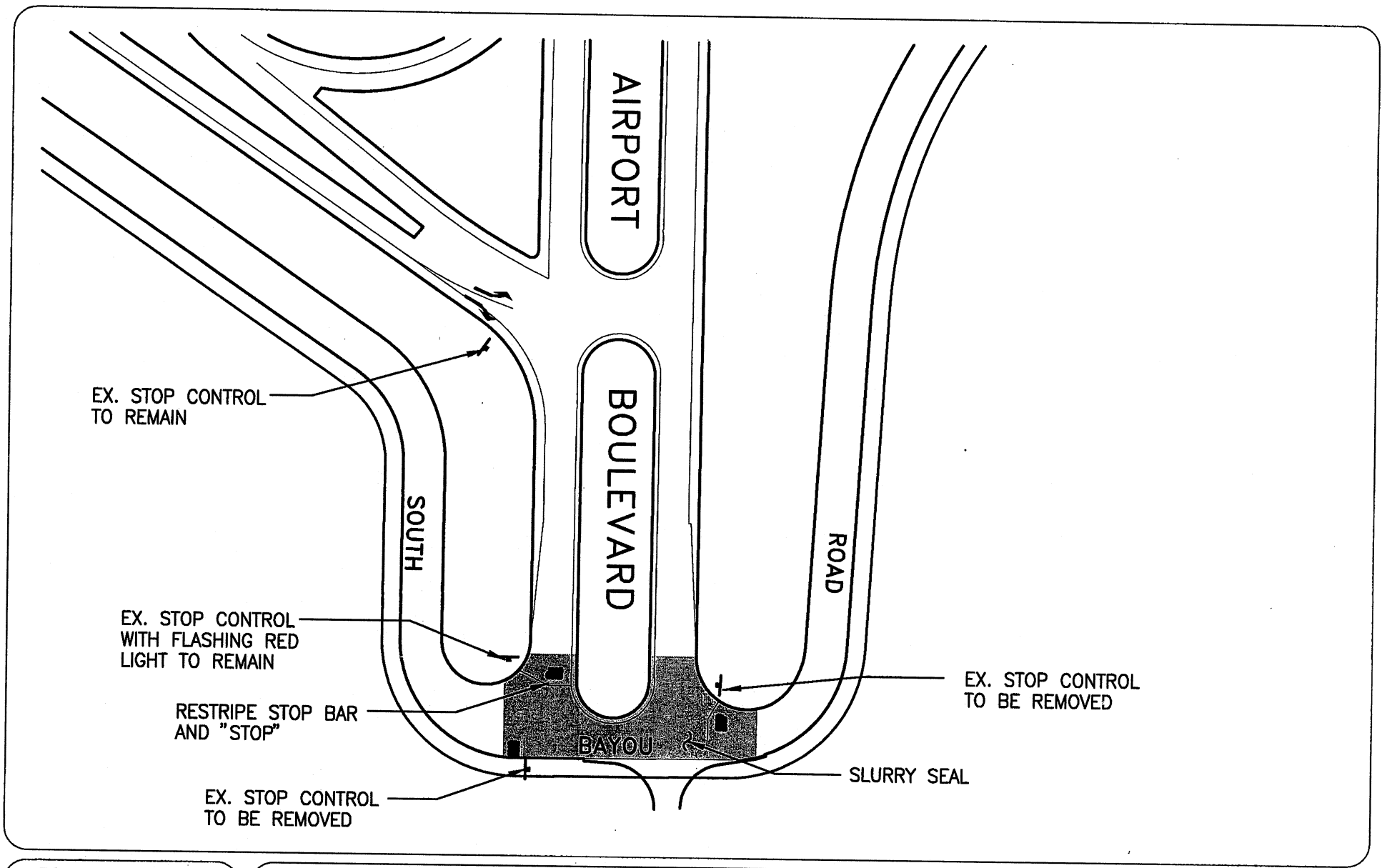

PERSONNEL	
Drafted by:	V. FALLIS
Designed by:	D. JABBOUR
Checked by:	D. JOHNSON
Scale:	N.T.S.

S. BAYOU ROAD AT AIRPORT BOULEVARD

(INTERSECTION CONTROL REVISION)

Stantec

Stantec Consulting Inc.
2590 Venture Oaks Way
Sacramento, CA 95833-3288
Tel. 916.569-2500
Fax. 916.921.9274
www.stantec.com

PROJECT No.
S B R
2

PROJECT NO. PHASE 6 SBR-2
SOUTH BAYOU ROAD – AIRPORT BLVD INTERSECTION

Introduction

It is proposed to revise the traffic control at the South Bayou Road/Airport Boulevard intersection to southbound stop control only.

Background

This facility is the only project for this intersection to be constructed as a major roadway component of the Metro Air Park Facilities Financing Plan.

Existing Facilities

Currently, Airport Boulevard intersects South Bayou Road as a 'T' intersection with 3-way stop control. Airport Boulevard is a four-lane facility with a median terminating at South Bayou Road with a stop sign and red flashing light. South Bayou Road is a two-lane facility providing through access to the east only and a dead end stub to the west for private access only with stop signs each direction.

Proposed Facilities

Pavement:	Slurry seal intersection after striping removal.
Signs:	Remove existing stop signs on South Bayou Road Stop sign and flashing light to remain on Airport Boulevard.
Striping:	Remove existing stop control striping on South Bayou Road. Re-stripe stop control striping on Airport Boulevard.

Preliminary Estimate of Costs
For
Metro Air Park
South Bayou Road Surface Improvements
Phase 6
SBR-2

May 2006

Item	Description	Quantity	Unit	Unit Price	Total
	(Airport Blvd Intersection Control)				
1.	Remove Stop Signs	1	LS	$550.00	$550.00
2.	Remove Striping	1	LS	$1,100.00	$1,100.00
3.	Slurry Seal	13,000	SF	$0.22	$2,860.00
4.	Striping	1	JOB	$500.00	$500.00
	Subtotal SBR-2				$5,010.00
	Engineering 25% (Public)				$1,252.50
	Contingencies 33% (Public)				$1,653.30
	Total SBR-2				$7,915.80

PROJECT NO. PHASE 1AB RD1000-1
DEL PASO ROAD CULVERT

Introduction

It is proposed to replace and upsize the existing culvert at Del Paso Road and West Drain Canal.

Background

This is the only phase of construction for this facility to be constructed as a component of the Metro Air Park Facilities Financing Plan.

Existing Facility

Currently, a 60-inch CMP culvert exists at this location.

Proposed Facility

Culvert: Remove the existing 60-inch CMP culvert at Del Paso Road. Install three (3) 84-inch CMP culverts.

PROJECT NO. PHASE 2 RD1000-2
POWER LINE ROAD CULVERT

Introduction

It is proposed to replace and upsize the existing culvert at Power Line Road and Canal Reach 5/7.

Background

This is the only phase of construction for this facility to be constructed as a component of the Metro Air Park Facilities Financing Plan.

Existing Facility

Currently, a 66-inch CMP culvert exists at this location.

Proposed Facility

Culvert: Remove the existing 66-inch CMP culvert at Power Line Road. Install three (3) 84-inch RCP culverts.

PROJECT NO. PHASE 1AA RD1000-5
PUMP STATION NO. 3

Introduction

The RD-1000 Pump Station #3 has been reconstructed with a new parallel outfall to the Sacramento River with a total capacity of 280 CFS. The existing pumps will be utilized and an additional pump will be added.

Preliminary Estimate of Cost
For
Metro Air Park
Off Site Drainage Improvements
Phase 1AA
RD1000-5

October 2006

Item	Description	Quantity	Unit	Unit Price	Total
1.	Pump Station & Outfall	1	JOB	$1,522,748.56	$1,522,748.56
	Subtotal RD1000-5				$1,522,748.56
	Total RD1000-5 (Metro Share)				$1,522,748.56
	Funded with Series 2004 A Bond Proceeds				$1,522,749.00

PROJECT NO. PHASE 1AA RD1000-6
BOX CULVERT/PUMP STATION

Introduction

It is proposed to remove the existing culverts and embankment at the confluence of the West Drain Canal and the entrance canal to Pump Station No. 3 south of Fishermans Lake and construct a box culvert in order to provide a full canal section.

Background

This is the only phase of construction for this facility to be constructed as a component of the Metro Air Park Facilities Financing Plan.

Existing Facility

Currently, a 60-inch CMP culvert and a 10x7 RCB exist at this location.

Proposed Facilities

Box Culvert:	Remove existing 60-inch CMP culvert, 10x7 RCB and embankment from canal. Construct box culvert or equivalent to the satisfaction of RD1000.
Pumps:	Install a 80 cfs pump.

Preliminary Estimate of Cost
For
Metro Air Park
Off Site Drainage Improvements
Phase 1AA
RD1000-6

October 2006

Item	Description	Quantity	Unit	Unit Price	Total
	(Box Culvert)				
1.	Box Culvert	1	JOB	$119,900.00	$119,900.00
2.	Install Pump	1	LS	$377,300.00	$377,300.00
	Subtotal RD1000-6				$497,200.00
	Total RD1000-6 *				$497,200.00

* The cost from RD-1000 included engineering and construction contingencies.

Funded with Series 2004 A Bond Proceeds $497,200.00

PROJECT NO. PHASE 3 RD1000-7
OFF-SITE R/W AND REACH NO. 8

Introduction

It is proposed to acquire off-site drainage right-of-way required to construct the widened canal section plus access road and to reconstruct the existing canal to the ultimate required capacity from the confluence of Reach No. 7 to the on-site pump station outfall. These improvements are to be constructed once the project storm water discharge exceeds 140 cfs at the southern project pump station.

Background

This facility is the only improvement to Reach No. 8 to be constructed as a component of the Metro Air Park Facilities Financing Plan.

Existing Facility

Currently, an existing canal drains from the north along the east side of Lone Tree Road past the proposed on-site pump station outfall, turning southeast, crossing under I-5 through three 8x5 RCB culverts and continuing southerly to its confluence with Reach No. 7. See exhibit D-2 , in volume 1 section G, for typical sections and alignments.

Proposed Facilities

Right-of-Way:	Acquire additional right-of-way as shown on exhibit D-2.
Canal Improvements:	Widen, deepen and flatten the side slopes of the existing canal as shown on exhibit D-2.
I-5 Crossing:	Bore and jack two (2) 78" RCP culverts under I-5 parallel to the existing RCB culverts at the depth of the proposed canal improvements.

Preliminary Estimate of Cost
For
Metro Air Park
Off Site Drainage Improvements
Phase 3
RD1000-7

October 2006

Item	Description	Quantity	Unit	Unit Price	Total
1.	Mobilization	1	LS	$33,000.00	$33,000.00
2.	Misc. Grading	1	LS	$66,000.00	$66,000.00
3.	Canal Excavation	32,000	CY	$6.60	$211,200.00
4.	Rip Rap	200	TON	$66.00	$13,200.00
5.	Bore & Jack Culvert	800	LF	$1,100.00	$880,000.00
6.	Culvert Headwalls	100	LF	$660.00	$66,000.00
7.	Hydro Seeding	10	AC	$2,750.00	$27,500.00
8.	Aggregate Baserock	2000	TON	$27.50	$55,000.00
9.	Gates	5	EA	$2,200.00	$11,000.00
10.	Local Drains	4	EA	$5,500.00	$22,000.00
	Subtotal RD1000-7				$1,384,900.00
	Engineering 25% (Private)				$346,225.00
	Contingencies 15% (Private)				$207,735.00
	Row Acquisition - Reach #8S	2.4	AC	$27,500.00	$66,000.00
	Row Acquisition - Reach #8N	0.7	AC	$27,500.00	$19,250.00
	Total RD1000-7				$2,024,110.00

$1.8 M in 1999 $

PROJECT NO. PHASE 1AA/1AB RD1000-8
AIRPORT/NCMWC IRRIGATION PUMP

Introduction

It is proposed to construct an irrigation pump station south of I-5 on the airport property. The pump station would be on the lateral of the West Drainage Canal. The purpose of this project is to provide water to the Sacramento International Airport from an alternative route, so that the Meister Canal can be abandoned.

Background

This facility is to be constructed as a component of the Metro Air Park Facilities Financing Plan.

Existing Facility

Currently there are no existing facilities.

Proposed Facility

Irrigation Pumps:	Install a 15-cfs irrigation pump.
Canal:	Construct drainage canal.

Preliminary Estimate of Cost
For
Metro Air Park
Off Site Drainage Improvements
Phase 1AA / Phase 1AB
RD1000-8

October 2006

Item	Description	Quantity	Unit	Unit Price	Total
1.	Mobilization/Dewatering	1	LS	$14,000.00	$14,000.00
2.	Structural Excavation	400	CY	$8.29	$3,314.59
3.	Structural Backfill	250	CY	$14.92	$3,728.92
4.	Canal Construction	15,000	CY	$5.39	$80,793.20
5.	Rock Slope Protection	100	TON	$45.58	$4,557.57
6.	Pump Sump Concrete	24	CY	$691.92	$16,606.11
7.	Miscellaneous Metalwork	1,300	LBS	$5.39	$7,002.08
8.	Modify & Install Pumps	1	LS	$14,500.00	$14,500.00
9.	Piping & Gates	1	LS	$21,000.00	$21,000.00
10.	Electrical	1	LS	$8,300.00	$8,300.00
11.	Site Work	1	LS	$58,500.00	$58,500.00
	Subtotal RD1000-8				$232,302.47
	Engineering 41.1% (Private)				$95,506.00
	Contingencies 10% (Private)				$23,230.25
	Constructions Management 11.9% (Private)				$27,583.00
	NMWC Administration & Coordination				$10,000.00
	NMWC Legal				$5,500.00
	Total RD1000-8				$394,121.71
	Funded with Series 2004 A Bond Proceeds				$241,804.00
	Funded with Series 2006 B Bond Proceeds				$152,317.71

PROJECT NO. PHASE 1AA/1AB SWR-2
SEWER LIFT STATION AND FORCEMAIN

Introduction

It is proposed to construct a lift station and forcemain sized for the ultimate capacity of 8.73 MGD and to install pumps with a 4.33 MGD capacity. The 4.33 MGD includes capacity for 40% of 7.33 MGD for the Metro Air Park project and 1.4 MGD for the Sacramento International Airport. This project includes the ultimate forcemains from the sewer lift station to the existing terminus of the sewer interceptor.

Background

This facility is the first phase of the lift station and the only phase of the forcemain to be constructed as a component of the Metro Air Park Facilities Financing Plan.

Existing Facilities

Currently, no sewer facilities exist at this project location.

Proposed Facilities

Right-of-Way:	Approximately 20-feet wide along the proposed future alignment of Meister Way right-of-way.
Wet Well:	Construct a wet well for the ultimate capacity of 8.73 MGD.
Forcemain:	Construct 2-16" shown on exhibit S-2, in volume 1 section H.
Pumps:	Install 4.33 MGD pumps (40% x 7.33 MGD + 1.4 MGD)
Access Road:	Construct a gravel access road along Meister Way from Lone Tree Road and along the forcemain route. Construct a paved access road along Meister way from Metro Parkway to Lone Tree Road.
Fencing	Construct fencing around the perimeter of the lift station.

Preliminary Estimate of Costs
For
Metro Air Park
Sewer Improvements
Phase 1AA / Phase 1AB
SWR-2

May 2006

Item	Description	Quantity	Unit	Unit Price	Total	CSD-1 Reimbursable Amount	Non-Reimbursable Amount
	Lift Station & Force Main						
1	Clearing and Grubbing	70,000	FT^2	$0.13	$9,100.00	$9,100.00	$0.00
2	Excavation	12,000	YD^3	$4.95	$59,400.00	$59,400.00	$0.00
3	2-16" Forcemains	8,650	LF	$245.26	$2,121,499.00	$2,121,499.00	$0.00
4	33" Sanitary Sewer 14'-18' Deep	850	LF	$368.91	$313,573.50	$313,573.50	$0.00
5	60" Manhole 14'-18' Deep	4	EA	$9,525.04	$38,100.16	$38,100.16	$0.00
6	Transition Manhole	1	EA	$15,328.79	$15,328.79	$15,328.79	$0.00
7	Bore Under Freeway	1	JOB	$418,057.97	$418,057.97	$418,057.97	$0.00
8	Gravel Road	3,510	LF	$15.33	$53,808.30	$53,808.30	$0.00
9	Ultimate Lift Station W/4.33 MGD Pumps	1	LS	$2,199,143	$2,199,143	$2,199,143	$0.00
10	Easement Acquisition	1.6	AC	$55,000.00	$88,000.00	$88,000.00	$0.00
11	R/W Acquisiton Lift Station	0.5	AC	$105,000.00	$52,500.00	$52,500.00	$0.00
12	Fencing	1,300	LF	$30.24	$39,312.00	$39,312.00	$0.00
	Subtotal SWR-2				$5,407,822.52	$5,407,822.52	$0.00
	Engineering 21.5% (Private)				$1,163,705.83	$1,163,705.83	$0.00
	Contingencies 51.8% (Private)				$2,801,252.07	$2,801,252.07	$0.00
	Construction Management 4.3% (Private)				$232,741.17	$0.00	$232,741.17
	Subtotal SWR-2				$9,605,521.59	$9,372,780.42	$232,741.17
	SIA Share (See Table SS-C in Volume 1)				$1,200,000.00	$1,200,000.00	
	Total SWR-2				$8,405,521.59	$8,172,780.42	$232,741.17

Volume 1, Table 2, Phase 1AA - CSD-1	$2,819,006.00
Volume 2, Table 2, Phase 1ABA - CSD-1	$5,353,774.42
Funded with Series 2004 A Bond Proceeds - Non CSD-1	$230,864.00
Funded with Series 2006 B Bond Proceeds - Non CSD-1	$1,877.17

PROJECT NO. PHASE 4 SWR-4
LIFT STATION UPGRADE

Introduction

It is proposed to install pumps in the lift station to add sufficient capacity for 100% development of Metro Air Park plus capacity for the SIA.

Background

This facility is the second phase of construction for the sewer lift station to be constructed as a component of the Metro Air Park Facilities Financing Plan.

Existing Facilities

Project SWR-2 will exist at time of construction, which will provide the wet well, and forcemain required for this project.

Proposed Facility

Pump: Install an additional pump with capacity for 100% development of Metro Air Park plus capacity for the SIA.

Preliminary Estimate of Costs
For
Metro Air Park
Sewer Improvements
Phase 4
SWR-4

May 2006

Item	Description	Quantity	Unit	Unit Price	Total	CSD-1 Reimbursable Amount	Non-Reimbursable Amount
	Pumps						
1.	Add Pumps for 100%	1	LS	$200,000.00	$200,000.00	$200,000.00	$0.00
	Subtotal SWR-4				$200,000.00	$200,000.00	$0.00
	Engineering 25% (Private)				$50,000.00	$50,000.00	$0.00
	Contingencies 15% (Private)				$30,000.00	$30,000.00	$0.00
	Total SWR-4				$280,000.00	$280,000.00	$0.00

PROJECT NO. PHASE 1AA WTR-1
ELVERTA ROAD WATER LINE

Introduction

It is proposed to construct a 12" water line from Metro Parkway to Lone Tree Road.

Background

This facility is proposed for construction in phase 1A to provide a water system loop at the north end of the project in order to supply water to meet flow and pressure requirements.

Existing Facilities

No facilities exist at this project location.

Proposed Facilities

12" Water Main:	Construct water main, valves and appurtenances identified as initial phase on Exhibit W-1.

Preliminary Estimate of Costs
For
Metro Air Park
Water Improvements
Phase 1AA/Phase 1AB
WTR-1

May 2006

Item	Description	Quantity	Unit	Unit Price	Total
	Elverta Road (Metro Air Parkway to Lone Tree Road, L= 1,700 LF)				
1.	12" Water Main Including Fire Hydrants	1,700	LF	$86.01	$146,224.51
2.	Service Stubs	1	EA	$7,884.66	$7,884.66
	Subtotal WTR-1				$154,109.17
	Engineering 15% (Private)				$23,116.38
	Contingencies 10% (Private)				$15,410.92
	Construction Management 3% (Private)				$4,623.28
	Total WTR-1				$197,259.74
	Funded with Series 2004 A Bond Proceeds				$123,840.00
	Funded with Series 2006 B Bond Proceeds				$73,419.74

PROJECT NO. PHASE 4 WTR-2
LONE TREE ROAD WATER LINE

Introduction

It is proposed to construct a 12" water line from Elverta Road to Elkhorn Boulevard.

Background

This facility is proposed for construction in phase 1A to provide a water system loop at the north end of the project in order to supply water to meet flow and pressure requirements.

Existing Facilities

No facilities exist at this project location.

Proposed Facilities

12" Water Main:	Construct water main, valves and appurtenances identified as initial phase on Exhibit W-1, in volume1 section I.
Access Road	Construct a 12' gravel access road on Lone Tree Road from Elverta Road to Elkhorn Blvd.
Grading	Rough Grading on Lone Tree Road.

Preliminary Estimate of Costs
For
Metro Air Park
Water Improvements
Phase 4
WTR-2

May 2006

Item	Description	Quantity	Unit	Unit Price	Total
	Lone Tree Road (Elkhorn Blvd. To Elverta Road, L = 10,500 LF)				
1.	12" Water Main Including Fire Hydrants	10,500	LF	$86.01	$903,105.00
2.	Service Stubs	25	EA	$9,042.15	$226,053.75
3.	Gravel Access Road	10,500	LF	$16.44	$172,620.00
4.	Rough Grading	40,000	CY	$4.95	$198,000.00
	Subtotal WTR-2				$1,499,778.75
	Engineering 15% (Private)				$224,966.81
	Contingencies 10% (Private)				$149,977.88
	Construction Management 3% (Private)				$44,993.36
	Total WTR-2				$1,919,716.80

PROJECT NO. PHASE 4 WTR-3
ROAD 'A' WATER LINE

Introduction

It is proposed to construct 2-12" water line from Metro Parkway to Lone Tree Road.

Background

This facility is proposed for construction in phase 1A to provide a water system loop at the north end of the project in order to supply water to meet flow and pressure requirements.

Existing Facilities

No facilities exist at this project location.

Proposed Facilities

2-12" Water Main:	Construct water main, valves and appurtenances identified as initial phase on Exhibit W-1, in volume 1 section I.

Preliminary Estimate of Costs
For
Metro Air Park
Water Improvements
Phase 4
WTR-3

May 2006

Item	Description	Quantity	Unit	Unit Price	Total
	Road "A" (Metro Air Parkway to Lone Tree Road, L = 2,400 LF)				
1.	2 - 12" Water Main Including Fire Hydrar	2,400	LF	$162.16	$389,184.00
2.	Service Stubs/Crossings	6	EA	$7,884.66	$47,307.96
	Subtotal WTR-3				$436,491.96
	Engineering 15% (Private)				$65,473.79
	Contingencies 10% (Private)				$43,649.20
	Construction Management 3% (Private)				$13,094.76
	Total WTR-3				$558,709.71

PROJECT NO. PHASE 1AA WTR-4
ROAD 'I' WATER LINE

Introduction

It is proposed to construct a 12" water line from Metro Parkway west to Elkhorn Boulevard.

Background

This facility is proposed for construction in phase 1A to provide a water system loop at the south end of the project in order to supply water to meet flow and pressure requirements.

This project was funded with the 2004 A Bond proceeds and is included with project MP-1.1 in the acquisition agreement.

Existing Facilities

No facilities exist at this project location.

Proposed Facilities

12" Water Main	Construct water main, valves and appurtenances identified as initial phase on Exhibit W-1, in volume 1 section I.
Access Road	Construct a 12' gravel access road on Road "I" from Elverta Road to Elkhorn Blvd.
Grading	Rough Grading on Road "I".

Preliminary Estimate of Costs
For
Metro Air Park
Water Improvements
Phase 4
WTR-5.1

May 2006

Item	Description	Quantity	Unit	Unit Price	Total
	Road "A" Water Line - West of MP				
1	Clearing & Grubbing	38,500	SF	$0.13	$5,005.00
2	Mobilization	1	JOB	$5,000.00	$5,000.00
3	24" Water Main	1,130	LF	$160.00	$180,800.00
	Subtotal WTR-5.1				$190,805.00
	Engineering 15% (Private)				$28,620.75
	Contingencies 15% (Private)				$28,620.75
	Construction Management 3% (Private)				$5,724.15
4.	Land Acquisition - Pipeline	0.5	AC	$55,000.00	$27,500.00
	Total WTR-5.1				$281,270.65

PROJECT NO. PHASE 1AB WTR-5.2
WATER STORAGE RESERVOIR AND BOOSTER PLANT

Introduction

It is proposed to construct a two and a half (2 ½) MG steel storage reservoir and booster plant, 24" potable water mains and acquire land to construct the storage reservoir, and a booster plant.

Background

These facilities are proposed for construction in the initial phase to provide a firm supply of potable water to meet development requirements and provide land acquisition for initial and future phase improvements. Acquisitions at the time the offsite facilities are required are not anticipated to be a problem and are not included in the initial phase.

Existing Facilities

No facilities exist at this project location.

Proposed Facilities

Storage Reservoir and Booster Plant:	Construct a 2 1/2 MG steel storage reservoir and pressure booster plant to store water and pressurize flows to meet flow and pressure requirements during peak demands.
12" & 30" Water Main:	Construct water main, valves and appurtenances from the storage reservoir and booster plant to Metro Parkway as identified on Exhibit W-1, in volume 1 section I.
24" Water Main:	Construct water main, valves and appurtenances from the storage reservoir and booster plant to the point of connection on a City of Sacramento T-Main located in South Bayou Road.
Right-of-Way:	Obtain land acquisition for 0.5 acre water main easement to access storage reservoir and 4.1 acre storage reservoir site.
Gravel Road	Construct a 12' gravel road to the treatment plant.
Fencing	Construct fencing around the perimeter of the plant.
Fair Share Cost	Pay the fair share cost of the T-Main upsize in South Bayou Road.

Preliminary Estimate of Costs
For
Metro Air Park
Water Improvements
Phase 1AB
WTR-5.2

May 2006

Item	Description	Quantity	Unit	Unit Price	Total
	Storage Reservoir and Booster Plant (Detention Facilities Within Open Space)				
1	Clearing & Grubbing	1	JOB	$28,500.00	$28,500.00
2	Access Road	4,250	LF	$11.00	$46,750.00
3	2 1/2 MG Storage Reservoir & Booster Plant	1	EA	$5,208,137.77	$5,208,137.77
4	12" Water Main Including Fire Hydrants	1,600	LF	$86.01	$137,623.07
5	30" Water Main	1,600	LF	$195.92	$313,474.77
6	24" T-Main - Connection to SIA Main	2,800	LF	$160.00	$448,000.00
7	Valves and Appurtenances	1	LS	$60,000.00	$60,000.00
8	Bore and Jack Under I5	1	JOB	$300,000.00	$300,000.00
9	Well Abandonment	1	JOB	$112,016.14	$112,016.14
	Subtotal WTR-5.2				$6,654,501.76
	Engineering 27.5% (Private)				$1,832,702.00
	Contingencies 51.8% (Private)				$3,447,031.91
	Construction Management 4.6% (Private)				$306,540.33
10	Land Acquisition - Storage Reservoir & Pumping Station	2.2	AC	$45,000.00	$97,470.00
11	Land Acquisition - Pipeline	0.5	AC	$45,000.00	$22,500.00
12	Component for SIA T-Main Upsize (Del Paso Tank Site to MAP POC)	1	JOB	$1,200,000.00	$1,200,000.00
	Total WTR-5.2				$13,560,746.00

WTR-5.2 is shown as three projects in Table 2 of Volume 1:

Water Tank and Booster Pump Site WTR-5.2-1	$10,207,160.00
Water Transmission Main WTR-5.2-2	$ 2,722,500.00
Arterial Streets WTR-5.2-3	$ 631,086.00

PROJECT NO. PHASE 1AB WTR-6
PURCHASE 1ST INCREMENT OF CITY WATER (1MGD)

Introduction

The Metro Air Park project will purchase the first increment of City Water in order to provide capacity for the initial phase of development.

A more detailed description of this fee is provided on page 74 of Volume 1 and in the Sacramento County Zone 50 Water Master Plan.

Preliminary Estimate of Costs
For
Metro Air Park
Water Improvements
Phase 1AB
WTR-6

May 2006

Item	Description	Quantity	Unit	Unit Price	Total
1.	Purchase 1st increment of City Water (1M(	1	LS	$1,595,902.00	$1,595,902.00
	Subtotal WTR-6				$1,595,902.00
	Total WTR-6				$1,595,902.00

PROJECT NO. PHASE 4 WTR-7
STORAGE RESERVOIR

Introduction

It is proposed to construct a 2.5 MG water storage reservoir adjacent to the initial reservoir and upgrade the booster plant.

Background

This facility is proposed to be constructed to provide ultimate water storage in order to supply water to meet flow and pressure requirements.

Existing Facilities

Currently, no facilities exist, however project MP-1, MP-2, WTR-1, WTR-2, WTR-4, WTR-5.1, and WTR-5.2 will exist at time of construction.

Proposed Facilities

Storage Reservoir and Booster Plant :	Construct a 2.5 MG steel storage reservoir and upgrade the booster plant to store water and to pressurize flows to meet flow and pressure requirements.

Preliminary Estimate of Costs
For
Metro Air Park
Water Improvements
Phase 4
WTR-7

May 2006

Item	Description	Quantity	Unit	Unit Price	Total
	Storage Reservoir				
1.	2.5 MG Storage Reservoir & Expand Booster Plant	1	JOB	$2,263,420.00	$2,263,420.00
	Subtotal WTR-7				$2,263,420.00
	Engineering 15% (Private)				$339,513.00
	Contingencies 15% (Private)				$339,513.00
	Total WTR-7				$2,942,446.00

PROJECT WTR-9 – PHASE 4
ROAD 'A' WATER LINE

Introduction

It is proposed to construct a 16" water line from Road "B" to the water storage reservoir.

Background

This facility is proposed for construction in phase 4 to complete the water system loop at the north end of the project in order to supply water to meet flow and pressure requirements.

Existing Facilities

No facilities exist at this project location.

Proposed Facilities

16" Water Main:	Construct water main, valves and appurtenances identified as initial phase on Exhibit W-1, in volume 1 section I.

Preliminary Estimate of Costs
For
Metro Air Park
Water Improvements
Phase 4
WTR-9

May 2006

Item	Description	Quantity	Unit	Unit Price	Total
	Road "A" (Terminus of 24" W.M. to Road "B", L = 1,000 LF)				
1.	16" Water Main	1,000	LF	$115.00	$115,000.00
2.	Service Stubs	2	EA	$9,042.15	$18,084.30
3.	Service Stubs/Crossings	1	LS	$7,884.66	$7,884.66
	Subtotal WTR-9				$140,968.96
	Engineering 15% (Private)				$21,145.34
	Contingencies 15% (Private)				$21,145.34
	Total WTR-9				$183,259.65

PROJECT NO. PHASE 1AA T-1
LIGHT RAIL R/W ACQUISITION

Introduction

It is proposed to provide an Irrevocable Offer of Dedication (IOD) to Regional Transit (RT) for a light rail right-of-way and acquire said right-of-way at such time as requested by RT.

Background

This facility will be funded as a component of the Metro Air Park Facilities Financing Plan.

Existing Facilities

Currently, no facilities exist at this location. However, RT has adopted a conceptual light rail alignment through the site.

Proposed Facilities

Land Acquisition: Acquire the 6.0 acres right-of-way for RT reserved by the IOD.

Preliminary Estimate of Costs
For
Metro Air Park
Light Rail Contribution
Phase 1AA
T-1

January 2006

Item	Description	Quantity	Unit	Unit Price	Total
	Light Rail (Power Line Road to Lone Tree Road)				
1.	ROW Acquisition (LMD)	2.0	AC	$55,000.00	$110,000.00
2.	ROW Acquisition (Comm)	4.0	AC	$55,000.00	$220,000.00
	Subtotal T-1				$330,000.00
	Total T-1				$330,000.00
	Funded with Series 2004 A Bond Proceeds				$330,000.00

PROJECT NO. PHASE 6 T-2
LIGHT RAIL – CONSTRUCTION AND ROLLING STOCK

Introduction

It is proposed to fund a fair share contribution for construction and rolling stock for the Downtown Natomas/Airport Light Rail Extension.

Background

This contribution will be funded as a component of the Metro Air Park Facilities Financing Plan.

Proposed Facilities

Contribution:	Provide fair share contribution for construction and equipment.

Preliminary Estimate of Costs
For
Metro Air Park
Light Rail Contribution
Phase 6
T-2

January 2006

Item	Description	Quantity	Unit	Unit Price	Total
	Light Rail (Power Line Road to Lone Tree Road)				
1.	Construction and Rolling Stock Contribution	1.0	LS	$10,860,000.00	$10,860,000.00
	Subtotal T-2				$10,860,000.00
	Total T-2				$10,860,000.00

PROJECT NO. PHASE 1AA T-3
LIGHT RAIL SITE ACQUISITION

Introduction

It is proposed to acquire land for proposed light rail station site.

Background

This facility will be funded as a component of the Metro Air Park Facilities Financing Plan.

Existing Facilities

Currently, no facilities exist at this location.

Proposed Facilities

Land Acquisition: Acquire the 2.0 acres site for Regional Transit.

Preliminary Estimate of Costs
For
Metro Air Park
Light Rail Contribution
Phase 1AA
T-3

January 2006

Item	Description	Quantity	Unit	Unit Price	Total
	Light Rail (Power Line Road to Lone Tree Road)				
1.	Light Rail Station Site Acquisition	2.00	AC	$55,000.00	$110,000.00
	Subtotal T-3				$110,000.00
	Total T-3				$110,000.00
	Funded with Series 2004 A Bond Proceeds				$110,000.00

PROJECT 1A PHASE 1C FS-1
FIRE STATION

Introduction

It is proposed to construct a fire station building in order to accommodate the move of existing Fire Station #3 to MP

Background

This facility is to be constructed as a component of the Metro Air Park Facilities Financing Plan

Existing Facilities

Currently, Fire Station #3 is located west of the Sacramento International Airport (SIA) on Elkhorn Boulevard along with the required apparatus.

Proposed Facilities

Fire Station:	Provide an 10,000± square feet building including all site improvements

Preliminary Estimate of Costs
For
Metro Air Park
Fire Station Facilities
Phase 1C
FS-1

March 2005

Item	Description	Quantity	Unit	Unit Price	Total
1.	Fire Station Construction	1	LS	$6,000,000.00	$6,000,000.00
	Subtotal FS-1				$6,000,000.00
	Engineering 25% (Private)				$1,500,000.00
	Contingencies 15% (Private)				$900,000.00
	Total FS-1				$8,400,000.00

PROJECT NO. PHASE 1AA FS-2
FIRE STATION LAND ACQUISITION

Introduction

It is proposed to acquire land in order to construct a fire station building and accommodate the move of existing Fire Station #3 to MP

Background

The land will be acquired as a component of the Metro Air Park Facilities Financing Plan

Existing Facilities

Currently, Fire Station #3 is located west of the Sacramento International Airport (SIA) on Elkhorn Boulevard along with the required apparatus.

Proposed Facilities

Land Acquisition: Acquire 1.0 acres of land

Preliminary Estimate of Costs
For
Metro Air Park
Fire Station Facilities
Phase 1A
FS-2

March 2005

Item	Description	Quantity	Unit	Unit Price	Total
1.	Land Acquisition (COMM)	1	AC	$49,500.00	$49,500.00
	Subtotal FS-2				$49,500.00
	Total FS-2				$49,500.00
	Funded with Series 2004 A Bond Proceeds				$45,000.00

PROJECT NO. PHASE 1AA HCP -1
HABITAT CONSERVATION PROGRAM FEE PAYMENT

Introduction

This is a fee to mitigate for loss of giant garter snake habitat lands.

Background

The cost is $20,779.22 dollars per acre for this fee.

Existing Facilities

N.A.

Proposed Facilities

This is payment of fees for 154 acres to be mitigated.

This fee has been paid.

Preliminary Estimate of Costs
For
Metro Air Park
Project Study Report
Habitat Conservation Program Fee Payment
Phase 1AA
HCP-1

January 2006

Item	Description	Quantity	Unit	Unit Price	Total
1.	Habitat Conservation Fee	154	AC	$20,779.22	$3,200,000
	Total HCP-1				$3,200,000
	Funded with Series 2004 A Bond Proceeds				$3,200,000*

Preliminary Estimate of Costs
For
Metro Air Park
Project Study Report
Habitat Conservation Program Fee Payment
Phase 1AA/Phase 1AB
HCP-2

January 2006

Item	Description	Quantity	Unit	Unit Price	Total
1.	Swainson Hawk Mitigation for Public Improvements	1	LS	$4,124,358.22	$4,124,358.22
	Total HCP-2				$4,124,358.22
	Funded with Series 2004 A Bond Proceeds				$3,300,000.00*
	Funded with Series 2006 B Bond Proceeds				$824,358.22